Thank you for purchasing our product!

Issues with your order? Give us a chance to make things right.
Do not return this item back to the store. Contact our friendly customer service department with any problems, comments or concerns.
Replacements for missing or damaged parts are shipped within 1 business day.

Email: **Support@AmGoodSupply.com**

Please check out our other products

Stainless Steel Work Tables
Equipment Stands
Stainless Steel Shelves
Commercial & Utility Sinks
Bakery Racks
Hood Filters
Storage Shelving
Utility Carts
Dunnage Rack
Commercial Floor Strainers
Grease Traps

AmGood Supply is a leading manufacturer and distributor of stainless steel and metal products for commercial and residential applications.

Our customers include homeowners, restaurants, retail and manufacturing businesses, non-profits, as well as state, local, and federal government agencies.

WWW.AMGOODSUPPLY.COM

Assembly Instruction

Stainless Steel Bar Sink

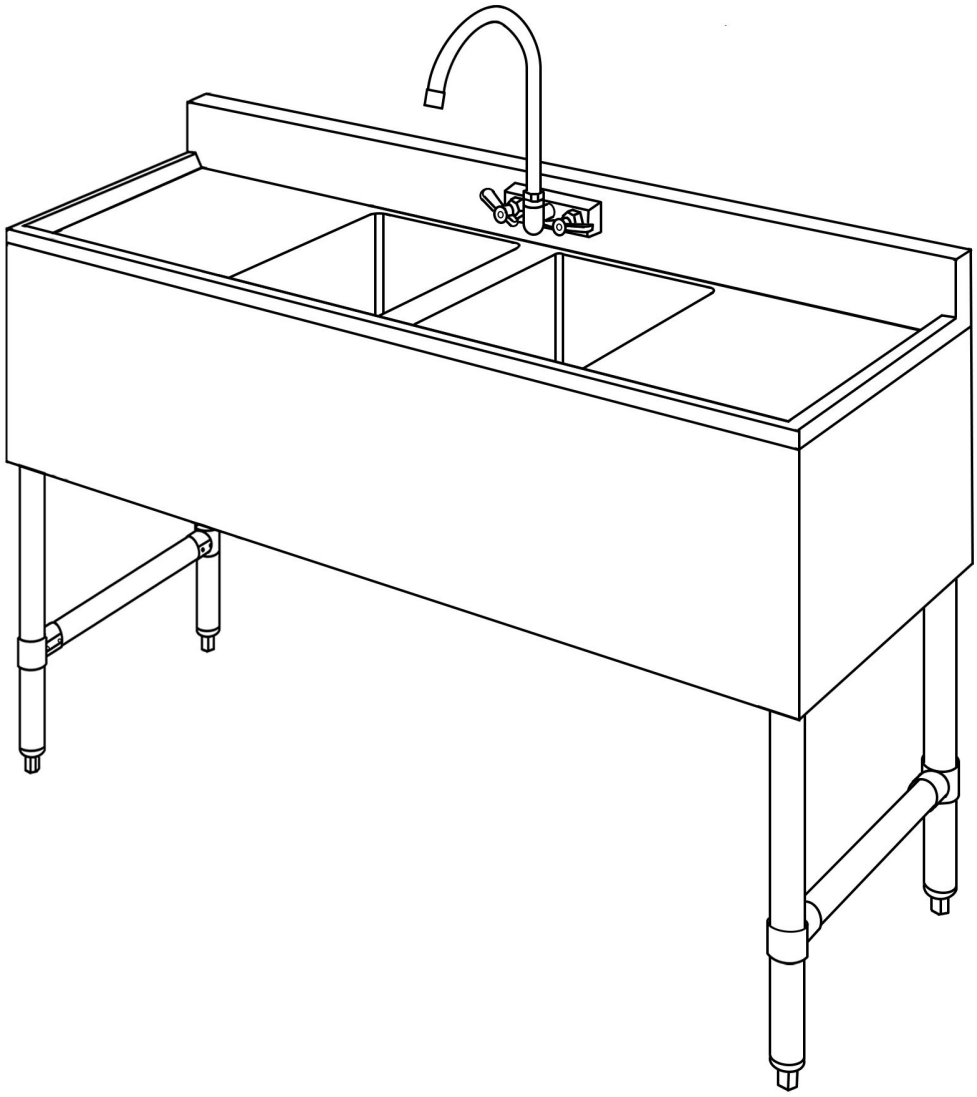

Accessories			
Part	Pattern	Part Name	Quantity
Ⓐ	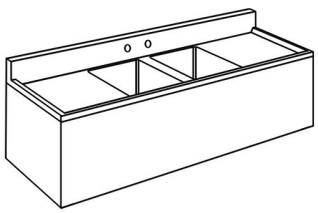	Sink	1
Ⓑ		Leg	4
Ⓒ	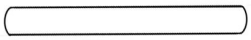	Pipe	2

Accessories			
Part	Pattern	Part Name	Quantity
Ⓓ	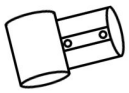	Connector	4
Ⓔ		Drain Basket	Same as tub quantities
Ⓕ		Faucet	1
Ⓖ		M8*1*10 Screw	16

To assemble please follow the steps below

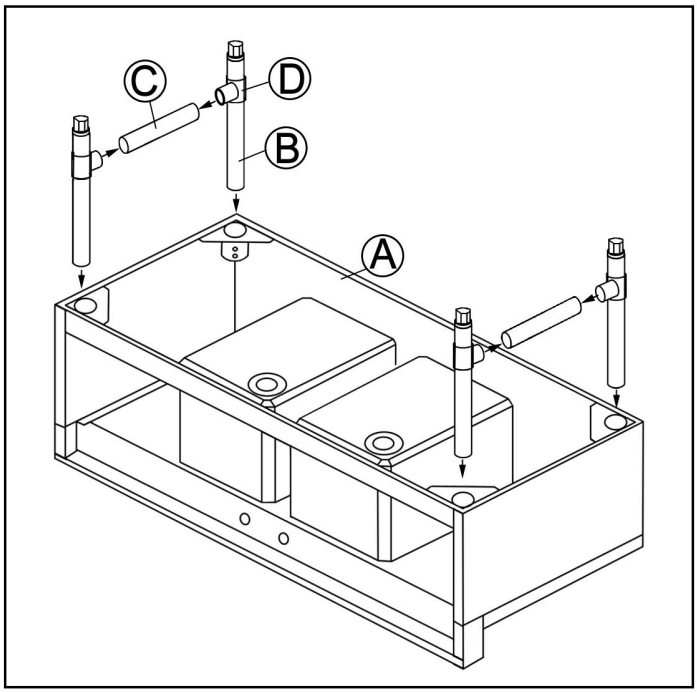

1) Turn the underbar sink body (A) upside down on a scratch-resistant surface, and insert the four legs into the leg sockets. Insert the cross brace into the brace socket on each side, connecting it to the legs.

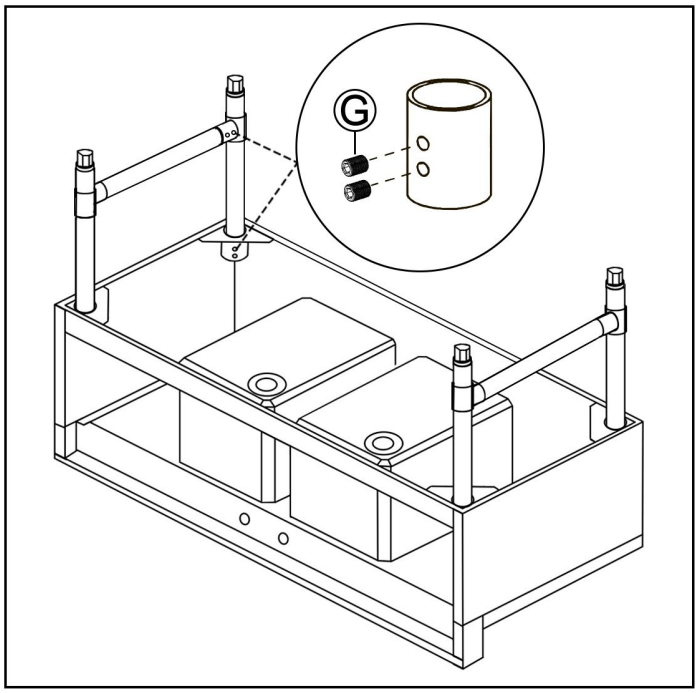

2) Secure the screws for the legs and the leg bracings to ensure stability.

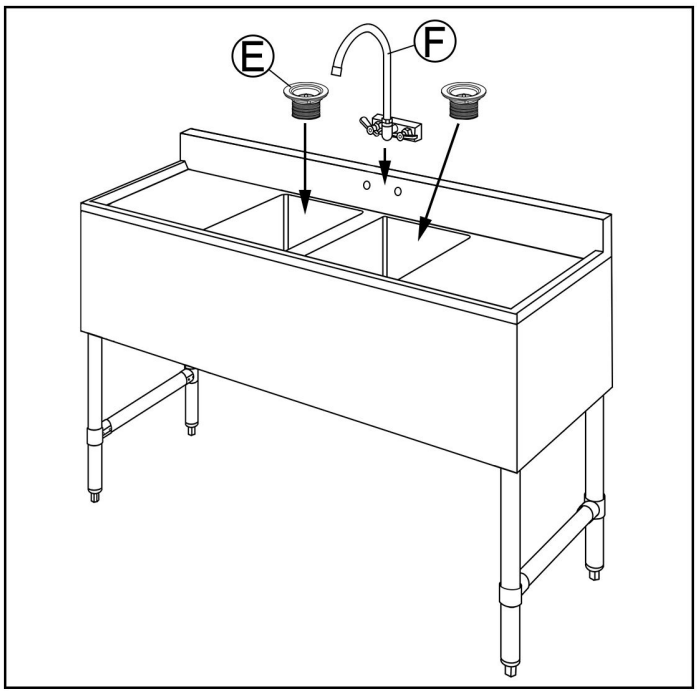

3) Position the sink upright. Adjust the feet as necessary to achieve your desired height or to level the sink on uneven floors. Next, attach the drain connection and faucet to the sink body.

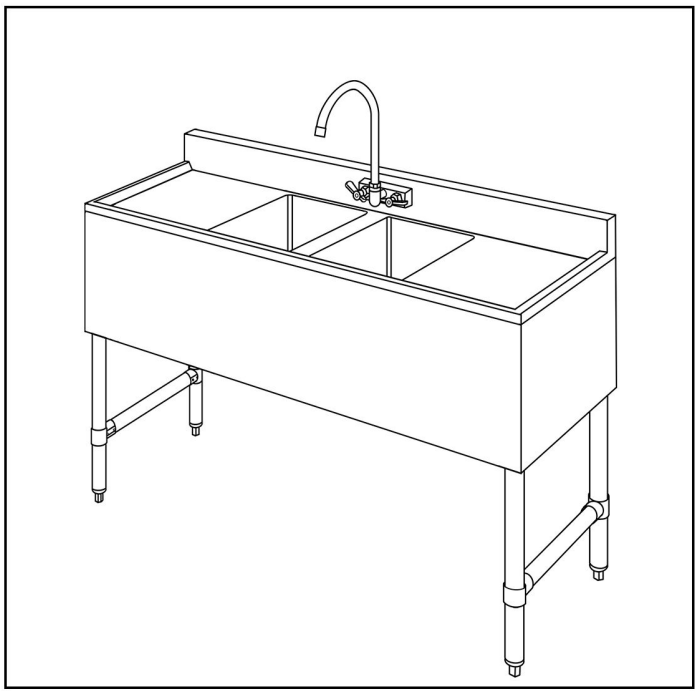

4) Remove any protective film.

*Faucet installation involves connecting water supply lines and may require tools or expertise. For optimal results and compliance with local regulations, we strongly recommend having a licensed plumber install the faucet.