NUU GARDEN®

ENJOY LIFE · SHARE HAPPINESS

INSTRUCTION MANUAL

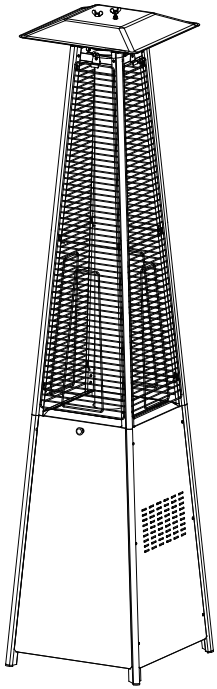

Patio Heater

AH001-JNC/AH001S-BK

INTRODUCTION

Thanks for purchasing and trusting NUUGARDEN with your home decorating plans. This product is a piece of furniture designed and made by NUUGARDEN Corp.

We are committed to R&D and innovation and creating the most exquisite and diverse outdoor series.

After unpacking and before every use, check whether the item shows any damage. In addition, check that you have all parts and hardware before assembly. If there is any damage, please do not use it and call customer service at (800) 257-7108 or email service@nuugarden.com. If you do not have all the parts lists, have your dealer contact us and we will send them to you immediately.

This furniture is for outdoor use only. Please take time to read and follow the instructions below. Then, use this item as described in this operating manual. We accept no liability for damage caused by improper use.

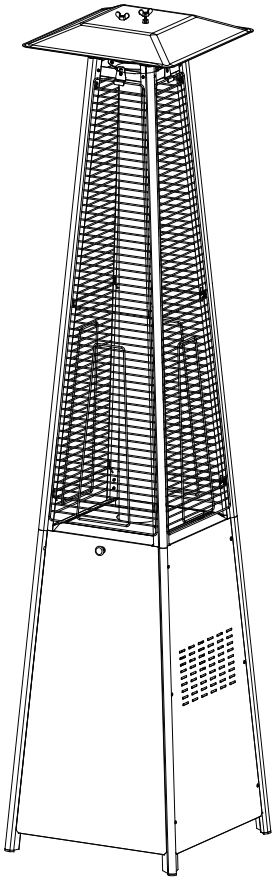

Intertek
5019775

INSTALLER:
Leave this manual with the appliance.
CONSUMER:
Retain this manual for future reference.

⚠ DANGER

If you smell gas:
1. Shut off gas to the appliance.
2. Extinguish any open flame.
3. If odor continues, keep away from the appliance and immediately call your gas supplier or fire department.

⚠ WARNING

Do not store or use gasoline or other flammable vapors and liquids in the vicinity of this or any other appliance. An LP-cylinder not connected for use shall not be stored in the vicinity of this or any other appliance.

⚠ WARNING: For Outdoor Use Only

⚠ DANGER

CARBON MONOXIDE HAZARD

This appliance can produce carbon monoxide which has no odor.

Using it in an enclosed space can kill you.

Never use this appliance in an enclosed space such as a camper, tent, car or home.

Extreme weather, such as hurricanes and high winds, is recommended to place the product indoors.

⚠ WARNING

Improper installation, adjustment, alteration, service or maintenance can cause property damage, injury or death. Read the installation, operation and maintenance instructions thoroughly before installing or servicing this equipment.

Conforms to ANSI STD Z83.26-2020 Certified to CSA STD 2.37-2020 Gasfired outdoor infrared patio heaters

PACKAGE CONTENTS

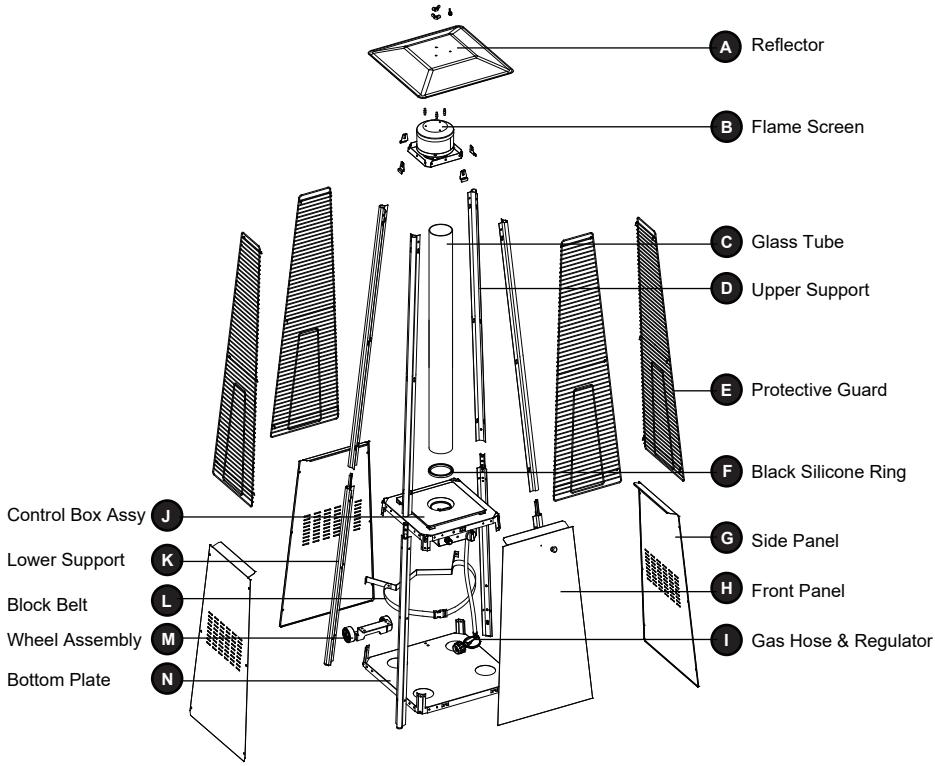

PART	DESCRIPTION	QUANTITY
A	Reflector	1
B	Flame Screen	1
C	Glass Tube	1
D	Upper Support	4
E	Protective Guard	4
F	Black Silicone Ring	1
G	Side Panel	3
H	Front Panel	1
I	Gas Hose & Regulator	1
J	Control Box Assy	1
K	Lower Support	4
L	Block Belt	1
M	Wheel Assembly	1
N	Bottom Plate	1

HARDWARE CONTENTS (shown actual size)

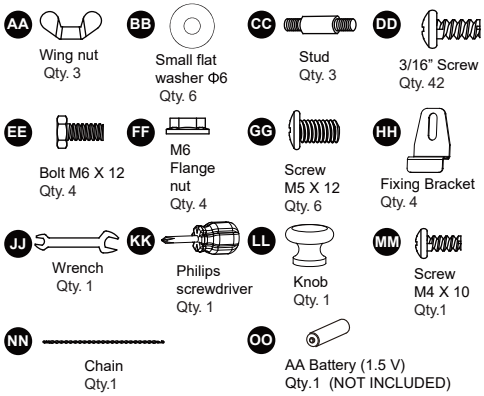

Please read and understand this entire manual before attempting to assemble, operate or install the product.

This manual contains important information about the assembly, operation and maintenance of this patio heater. General safety information is presented in these first few pages and is also located throughout the manual. Keep this manual for future reference and to educate new users of this product. This manual should be read in conjunction with the labeling on the product. Safety precautions are essential when any mechanical or propane-fueled equipment is involved. These precautions are necessary when using, storing, and servicing this item. Using this equipment with the respect and caution demanded will reduce the possibilities of personal injury or property damage. The following symbols shown below are used extensively throughout this manual. Always heed these precautions, as they are essential when using any mechanical or fueled equipment.

⚠ DANGER

DANGER indicates an imminently hazardous situation which, if not avoided, will result in death or serious injury.

⚠ DANGER

Failure to comply with the precautions and instructions provided with this heater can result in death, serious bodily injury and property loss or damage from hazards of fire, explosion, burn, asphyxiation, and/or carbon monoxide poisoning. Only persons who can understand and follow the instructions should use or service this heater.

⚠ DANGER

• EXPLOSION - FIRE HAZARD
• Keep solid combustibles, such as building materials, paper or cardboard, a safe distance away from the heater as recommended by the instructions.
• Provide adequate clearances around air openings into the combustion chamber.
• Never use the heater in spaces which do or may contain volatile or airborne combustibles, or products such as gasoline, solvents, paint thinner, dust particles or unknown chemicals.
• During operation, this product can be a source of ignition. Keep heater area clear and free from combustible materials, gasoline, paint thinner, cleaning solvents and other flammable vapors and liquids. Do not use heater in areas with high dust content. Minimum heater clearances from combustible materials: 3 feet from the sides & 3 feet from the top.

⚠ WARNING

We cannot foresee every use which may be made of our heaters.
Check with your local fire safety authority if you have questions about heater use.
Other standards govern the use of fuel gases and heat producing products for specific uses. Your local authorities can advise you about these.
If no local codes exist, follow National Fuel Gas Code, ANS Z223.1. In Canada, installation must conform to local codes. If no local codes exist, follow the current National standards of CANADA CAN/CGA-B 149.2.

⚠ DANGER

FOR YOUR SAFETY
If you smell gas:
1. Shut off gas to the appliance.
2. Extinguish any open flame.
3. If odor continues, keep away from the appliance and immediately call you gas supplier or fire department.

⚠ DANGER

• CARBON MONOXIDE HAZARD
• This heater is a combustion appliance. All combustion appliances produce carbon monoxide (CO) during the combustion process. This product is designed to produce extremely minute, non-hazardous amounts of CO if used and maintained in accordance with all warnings and instructions. Do not block air flow into or out of the heater.
• Carbon Monoxide (CO) poisoning produces flu-like symptoms, watery eyes, headaches, dizziness, fatigue and possibly death. You can't see it and you can't smell it. It's an invisible killer. If these symptoms are present during operation of this product get fresh air immediately!
• For outdoor use only.
• Never use inside house, or other unventilated or enclosed areas.
• This heater consumes air (oxygen). Do not use in unventilated or enclosed areas to avoid endangering your life.

⚠ WARNING

WARNING indicates an imminently hazardous situation which, if not avoided, will result in death or serious injury.

⚠ WARNING

Improper installation, adjustment, alteration, service or maintenance can cause property damage, injury or death. Read the installation, operation and maintenance instructions thoroughly before installing or servicing this equipment.

⚠ DANGER

• EXPLOSION - FIRE HAZARD
• Never store propane near high heat, open flames, direct sunlight, other ignition sources or where temperatures exceed 120 degrees F (49°C).
• Propane vapors are heavier than air and can accumulate in low places. If you smell gas, leave the area immediately.
• Never install or remove propane cylinder while heater is lighted, near flame, other ignition sources or while heater is hot to touch.
• This heater is red hot during use and can ignite flammables too close to the burner. Keep flammables at least 3 feet from sides & 3 feet from top. Keep gasoline and other flammable liquids and vapors well away from heater.
• Store the propane cylinder outdoors in a well ventilated space out of reach of children. Never store the propane cylinder in an enclosed area (house, garage, etc.). If heater is to be stored indoors, disconnect the propane cylinder for outdoor storage.

⚠ WARNING

• This product is fueled by propane gas. Propane gas is invisible, odorless, and flammable. An odorant is normally added to help detect leaks and can be described as a “rotten egg” smell. The odorant can fade over time so leaking gas is not always detectable by smell alone.
• Propane gas is heavier than air and leaking propane will sink to the lowest level possible. It can ignite by ignition sources including matches, lighters, sparks or open flames of any kind many feet away from the original leak. Use only propane gas set up for vapor withdrawal.
• Store or use propane gas in compliance with local ordinances and codes or with ANS/NFPA 58. Turn off propane when not in use.

⚠ WARNING

• Alert children and adults to the hazards of high surface temperatures. Stay away from these surfaces to avoid burning skin or igniting clothing.
• Carefully supervise young children when in the vicinity of the heater.
• Do not hang clothing or any other flammable materials from the heater, or place on or near the heater.
• Replace any guard or protective device removed for servicing the appliance prior to placing back in service.
• Installation and repair should be done by a qualified service person. The heater should be inspected before use and annually by a qualified service person. More frequent cleaning may be required as necessary. It is imperative that the control compartment, burners, and circulating air passageway of the appliance be kept clean.

⚠ WARNING

Do not store or use gasoline or other flammable vapors and liquids in the vicinity of this or any other appliance. An LP-cylinder not connected for use shall not be stored in the vicinity of this or any other appliance.

⚠ WARNING

California Proposition 65
Combustion by-products produced when using this product contain chemicals known to the State of California to cause cancer, birth defects, and other reproductive harm.

⚠ WARNING

BURN HAZARD
• Never leave heater unattended when hot or in use.
• Keep out of reach of children.

⚠ WARNING

Certain materials or items, when stored under the heater, will be subjected to radiant heat and could be seriously damaged.

⚠ CAUTION

SERVICE SAFETY
• Keep all connections and fittings clean. Make sure propane cylinder valve outlet is clean.
• During set up, check all connections and fittings for leaks using soapy water. Never use a flame.
• Use as a heating appliance only. Never alter in any way or use with any device.

⚠ CAUTION

CAUTION indicates an imminently hazardous situation which, if not avoided, may result in minor or moderate personal injury, or property damage.

⚠ WARNING: For Outdoor Use Only

⚠ DANGER

CARBON MONOXIDE HAZARD
This appliance can produce carbon monoxide which has no odor. Using it in an enclosed space can kill you. Never use this appliance in an enclosed space such as a camper, tent, car or home.

PREPARATION

Before beginning assembly of product, make sure all parts are present. Compare parts with package contents list and hardware contents above. If any part is missing or damaged, do not attempt to assemble the product. Contact customer service for replacement parts.

Estimated Assembly Time: 60 minutes

Tools Required for Assembly (not included):
Phillips screwdriver w/ medium blade. Leak Detection Solution.

SCAN ME!

For more assembly instructions, please visit our Youtube channel.

https://www.youtube.com/@nuugardenusa

1. Assemble the wheel assembly to the bottom plate. Fix the wheel assembly to the bottom plate using 4pcs bolt M6X12 and 4pcs flange nut M6.

Hardware Used

EE	Bolt M6 X 12		x 4
FF	M6 Flange nut		x 4
JJ	Wrench		x 1

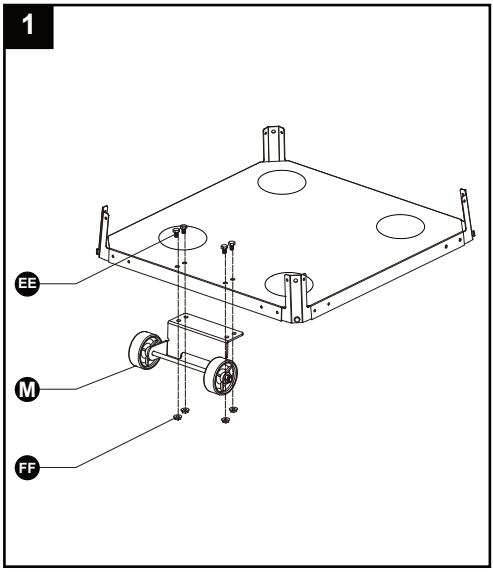

2-1. Unscrew the switch button, load small battery, tighten the switch button.
2-2. Insert the pins of the base to the holes of lower support, press to secure the pins. Using 4pcs screw M5x12 to secure the lower support and base.
Insert the pins of the control box assy to the holes of upper support, press to secure the pins. Using 4pcs screw 3/16” screw to secure the upper support and control box assy.

Hardware Used

GG	Screw M5 X 12		x 4
DD	3/16” Screw		x 4
KK	Philips screwdriver		x 1

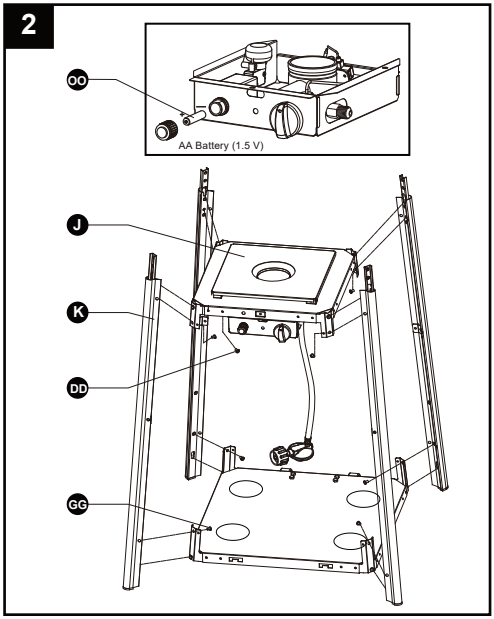

3.Assemble block belt.
Fix the block belt to the 2pcs of lower support behind the front door,using 2pcs screw M5X12.

Hardware Used

GG Screw M5 X 12 x 2

KK Philips screwdriver 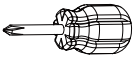 x 1

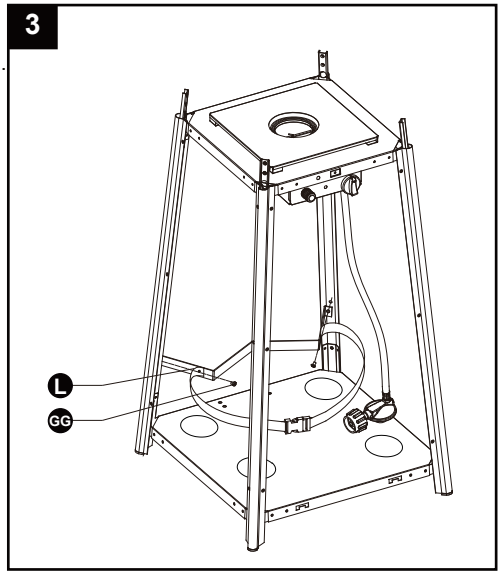

4. Assemble the middle support.
Insert the 4pcs upper support to the lower support. Secure them with 8pcs screw 3/16”.

Hardware Used

DD 3/16” Screw x 8

KK Philips screwdriver 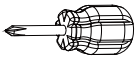 x 1

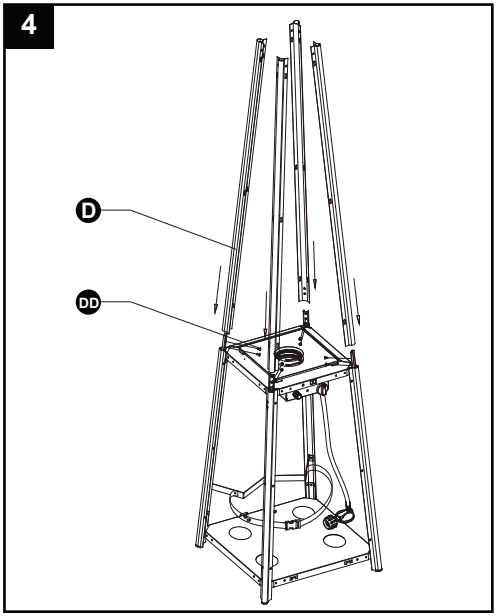

5. Assebmle the flame screen to the upper support.
Secure the flame screen to the upper support using 8pcs screw 3/16”.

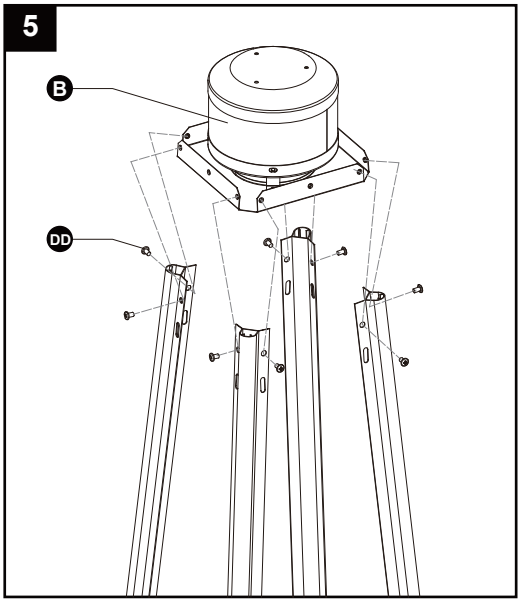

Hardware Used

WARNING

Note:Please remove the blue film from the reflector cover before installation!

DD 3/16” Screw x 8

KK Philips screwdriver 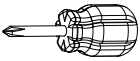 x 1

6.Please remove the blue film from the reflector before installation.
Assemble the reflector onto the flame screen. Screw the 3pcs stud on the flame screen,put 3pcs washer 6 onto the top of stud,then put the reflector onto the stud, secure them with 3pcs washer 6 and 3pcs wing nut.

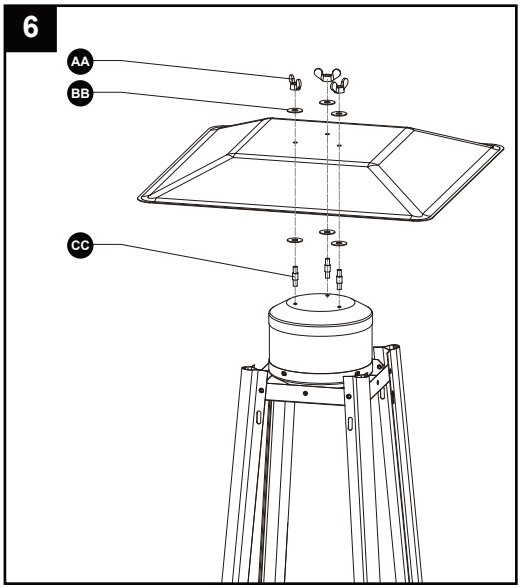

Hardware Used

WARNING

Note:Please remove the blue film from the reflector cover before installation!

AA Wing nut x 3

BB Washer Φ6 x 6

CC Stud x 3

7. Carefully install the glass tube by lifting up and inserting through the center hole in the upper plate. Ensure the black silicone ring is attached to the lower edge of the glass tube as illustrated. Slide the glass tube through the hole of the lower plate cover and onto the middle plate. Check and ensure that the glass tube is positioned properly and is completely covering the center hole of the middle plate.

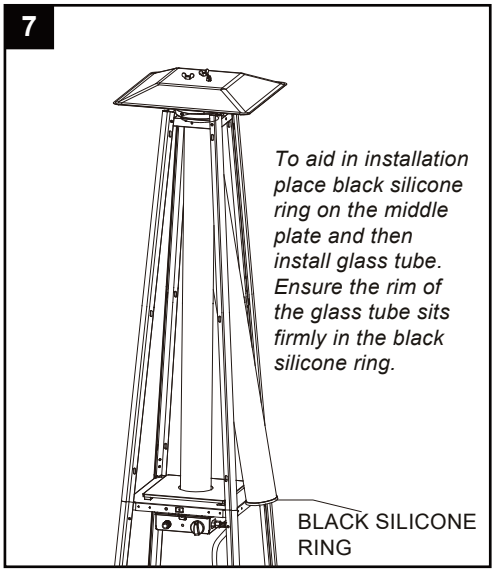

WARNING! The black silicone ring must be in place prior to operating the heater.

8. Assembly the protective guard.
Hang the hooks of the protective guard onto the holes in supports.
Secure the protective guards with fixing brackets with 4pcs 3/16" screws.

Hardware Used

DD	3/16” Screw		x 4
KK	Philips screwdriver		x 1
HH	Fixing Bracket		x 4

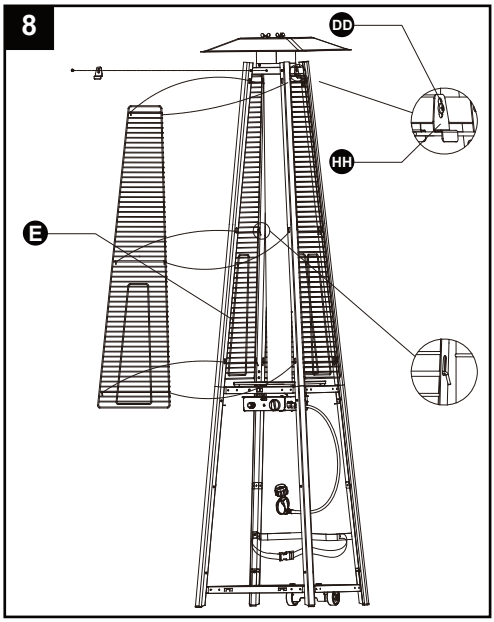

9. Attach the three side panels to the heater using 18pcs screw 3/16”.
Note : Do not cover the front side where the control knob is.

Hardware Used

DD	3/16” Screw		x 18
KK	Philips screwdriver		x 1

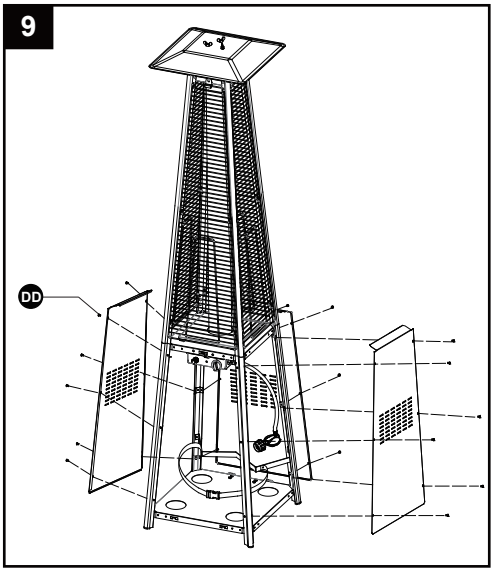

10. Install the knob to M4x10 screw. Hang the chain to the hole on the control box assy and put the pothook of front panel to the holes of bottom plate.

Hardware Used

LL	Knob		x 1
MM	Screw M4 X 10		x 1
NN	Chain		x 1
KK	Philips screwdriver		x 1

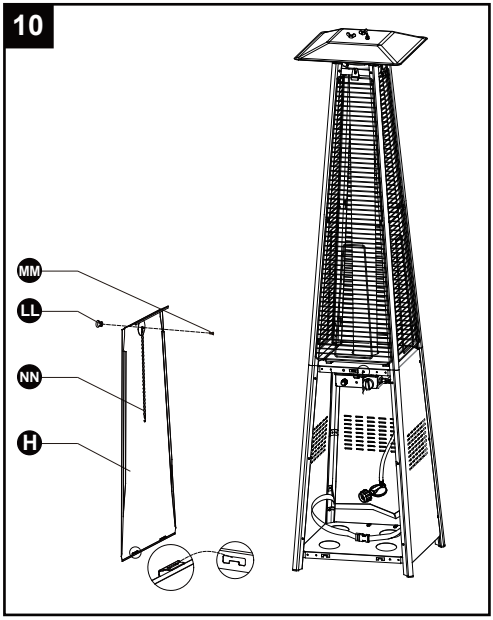

11. Screw gas hose and regulator to propane cylinder (not included). Do not cross-thread.

Use a standard 20 lb. propane cylinder only. (approximately 12.2 in. / 31cm. in diameter and 17.9 in. / 45.5cm high).

Use this heater only with a propane vapor withdrawal supply system. See chapter 5 of the standard for storage and handling of liquefied petroleum gas, ANS/NFPA 58. Your local library or fire department should have this book. Storage of an appliance indoors is permissible only if the cylinder is disconnected and removed from the appliance. A cylinder must be stored outdoors in a well-ventilated area out of the reach of children. A disconnected cylinder must have dust caps tightly installed and must not be stored in a building, garage or any other enclosed area. The maximum inlet gas supply pressure: 250 psi /1750 kPa. The minimum inlet gas supply pressure: 5 psi /35kPa. Manifold pressure with regulator provided: 11 inch W.C/ 2.74 kPa. The minimum hourly of 17000 Btu /4.98 kW is required input rating for an appliance for automatic operation at ratings less than full input rating. The pressure regulator and hose assembly supplied with the appliance must be used. The installation must conform with local codes, or in the absence of local codes,with national fuel gas code, ANS Z223.1/NFPA54, natural gas and propane Installation Code, CSA B149.1, or propane storage and handling code, B149.2.

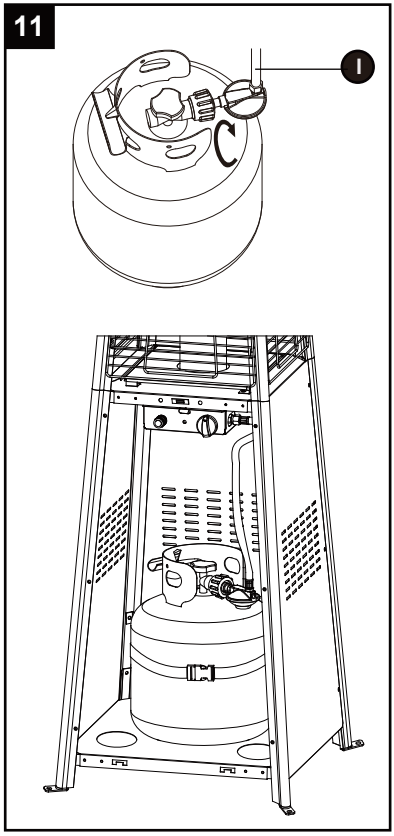

A dented, rusted or damaged propane cylinder may be hazardous and should be checked by your cylinder supplier. Never use a propane cylinder with a damaged valve connection.

The propane cylinder must be constructed and marked in accordance with the specifications for LP gas cylinders of the U.S. Department of Transportation (DOT) or the standard for cylinders, spheres and tubes for transportation of dangerous goods and commission, CAN/CSA-B339.

The cylinder must have a listed overfilling prevention device. The cylinder must have a connection device compatible with the connection for the appliance. The cylinder used must include a collar to protect the cylinder valve. Never connect an unregulated propane cylinder to the heater.

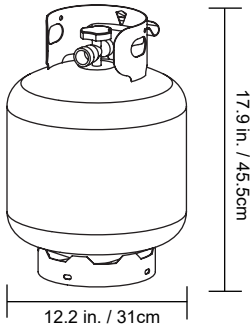

Standard 20 lb. tank

The knob on the LP tank must be closed. Make sure that the knob is turned clockwise to a full stop. The cylinder supply system must be arranged for vapor withdrawal. Check that the control knob on the control unit is turned off. Hold the regulator in one hand and insert the nipple into the valve outlet. Be sure the nipple is centered in the valve outlet. The coupling nut connects to the large outside threads on the valve outlet. Hand-tighten the coupling nut clockwise until it comes to a full stop. Firmly tighten by hand only.
To Disconnect: Fully close the tank valve by turning clockwise. Turn the coupling nut counterclockwise until the regulator assembly detaches.

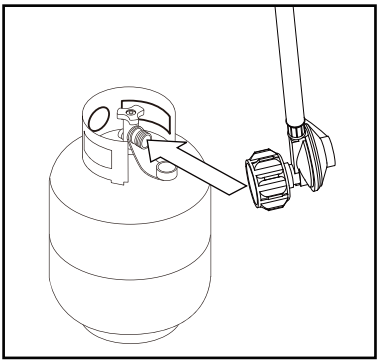

- Do not store a spare LP-gas cylinder under or near this appliance;
- Never fill the cylinder beyond 80 percent full;
- Place the dust cap on the cylinder valve outlet whenever the cylinder is not in use. Only install the type of dust cap on the cylinder valve that is provided with the cylinder valve. Other type of caps or plugs may result in leakage of propane.

Leak Check

⚠ WARNING

- Perform all leak tests outdoors.
- Extinguish all open flames.
- NEVER leak test when smoking.
- Do not use the heater until all connections have been leak tested and do not leak.

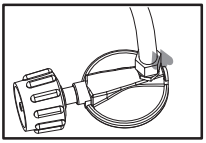

Hose / Regulator connection

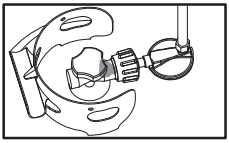

Regulator / Cylinder connection

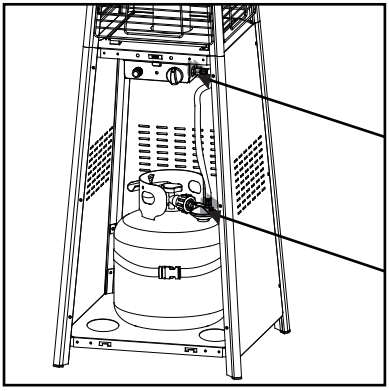

1. Make 2-3 oz. of leak check solution (one part liquid dishwashing detergent and three parts water).
2. Apply several drops of solution where hose attaches to regulator.
3. Apply several drops of solution where regulator connects to cylinder.
4. Make sure all patio heater and light valves are OFF.
5. Turn cylinder valve ON.

If bubbles appear at any connection, there is a leak.

1. Turn cylinder valve OFF.
2. If leak is at hose/regulator connection: tighten connection and perform another leak test. If bubbles continue appearing, the hose should be returned to the place of purchase.
3. If leak is at regulator/cylinder valve connection: disconnect, reconnect, and perform another leak check. If you continue to see bubbles after several attempts, cylinder valve is defective and should be returned to cylinder's place of purchase.

If NO bubbles appear at any connection, the connections are secure.

NOTE: *Whenever gas connections are loosened or removed, you must perform a complete leak test.*

4. Complete installation.

⚠ DANGER

- CARBON MONOXIDE HAZARD
- For outdoor use only. Never use inside house, or other unventilated or enclosed areas. This heater consumes air (oxygen). Do not use in unventilated or enclosed areas to avoid endangering your life.

Caution: *Do not attempt to operate until you have read and understand all General Safety Information in this manual and all assembly is complete and leak checks have been performed.*

This appliance shall be used only in a well-ventilated space and shall not be used in a building, garage or any other enclosed area.
An appliance may be installed with shelter no more inclusive than:
1)With walls on all sides, but with no overhead cover.
2)Within a partial enclosure which includes an overhead cover and no more than two side walls. These side walls may be parallel, as in a breezeway, or at right angles to each other.
3)Within a partial enclosure which includes an overhead cover and three side walls, as long as 30 percent or more of the horizontal periphery of the enclosure is permanently open.

Before Turning Gas Supply ON:
1. Your heater was designed and approved for outdoor use only. Do NOT use it inside a building, garage, or any other enclosed area.
2. Make sure surrounding areas are free of combustible materials, gasoline, and other flammable vapors or liquids.
3. Ensure that there is no obstruction to air ventilation. Be sure all gas connections are tight and there are no leaks.
4. Be sure the cylinder cover is clear of debris. Be sure any component removed during assembly or servicing is replaced and fastened prior to starting.

Before Lighting:
1. Heater should be thoroughly inspected before each use, and by a qualified service person at least annually. If relighting a hot heater, always wait at least 5 minutes.
2. Inspect the hose assembly for evidence of excessive abrasion, cuts, or wear. Suspected areas should be leak tested. If the hose leaks, it must be replaced prior to operation. Only use the replacement hose assembly specified by manufacturer.
3. The pressure regulator and hose assembly supplied with the appliance must be used. Replacement pressure regulators and hose assemblies must be those specified by the appliance manufacturer.

Lighting:
Note: *This heater is equipped with a pilot light that allows for safer startups and shutdowns. Pilot must be lit before main burner can be started.*
1. Turn the control knob to the “OFF” position.
2. Fully open LP cylinder valve.
3. Push control knob in and rotate to pilot position (*Figure 1)*.
Note: *For initial start or after any cylinder change, hold control knob in for 2 minutes to purge air from gas lines before proceeding.*

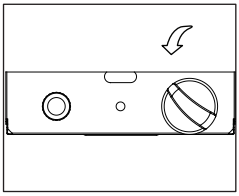

Figure 1

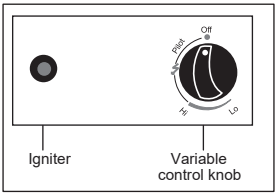

Figure 2

4. Push and release the igniter button until pilot flame is visible through the glass tube.
5. Once the pilot is lit, continue to depress the control knob for 30 seconds.
6. If the pilot does not stay lit, repeat steps 4 to 6.
7. If after repeating steps 4 to 6 unit does not light, then
   -Push in control knob and turn counterclockwise to “PILOT” (*Figure 3)*.
   -As you are depressing the control knob, place long stem lighter through the glass tube to light the pilot (*Figure 4)*.
   -Repeat step 6.

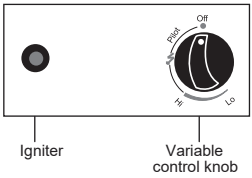

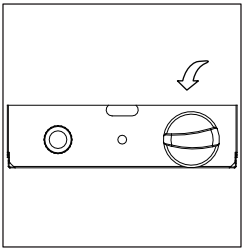

Figure 3

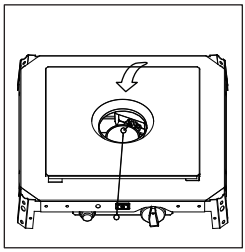

Figure 4

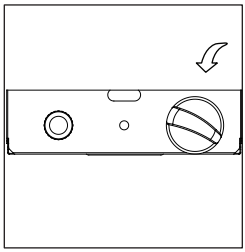

Figure 5

8. Push in and turn the control knob to the “HIGH”, then release control knob. If you want a lower temperature, push in the control knob and turn counterclockwise to the “LOW” (*Figure 5)*.

Note: *Improper operation, can cause injury or property damage. If pilot fails to remain lit, all valves should be closed and a waiting period of at least 5 minutes should pass before attempting to light.*

If you experience any ignition problem please consult “Troubleshooting” on page 19.
Caution: *Avoid inhaling fumes emitted from the heater’s first use. Smoke and odor from the burning of oils used in manufacturing will appear. Both smoke and odor will dissipate after approximately 30 minutes. The heater should NOT produce thick black smoke.*
Note: *The burner may be noisy when initially turned on. To eliminate excessive noise from the burner, turn the control knob to the PILOT position. Then, turn the knob to the level of heat desired.*

Note:
In Normal condition, the height of flame is 2/3 height of glass tube under Hi position. the height of flame is 1/3 height of glass tube under Low position.The flame is stable and bright. No noise nor black smoke.Contrarily it is abnormal condition.

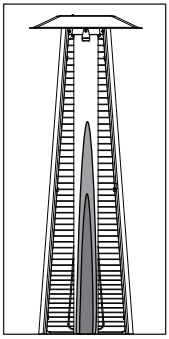

Normal

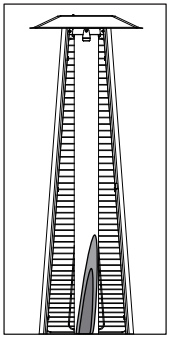

Abnormal

⚠ WARNING

FOR YOUR SAFETY
Be careful when attempting to manually ignite this heater. Holding in the control knob for more than 10 seconds before igniting the gas will cause a ball of flame upon ignition.

When heater is ON:

The flame should be blue with straight yellow tops. If excessive yellow flame is detected, turn off heater and consult “Troubleshooting” on page 19.

Re-lighting:

Note: *For your safety, control knob cannot be turned OFF without first depressing control knob in PILOT position and then rotating it to OFF.*
1. Turn control knob to OFF.
2. Wait at least 5 minutes, to let gas dissipate, before attempting to relight Pilot.
3. Repeat the “Lighting” steps on prior page.

⚠ WARNING

FOR YOUR SAFETY
Heater will be hot after use. Handle with extreme care.

Shut Down:

1. Turn control knob clockwise to PILOT. (Normally, burner will make a slight popping sound when extinguished.) Burner will extinguish but PILOT will remain ON.
2. To extinguish PILOT depress control knob and continue to turn it clockwise to OFF.
3. Turn cylinder valve clockwise to OFF and disconnect regulator when heater is not in use.

Note: After use, some discoloration of the emitter screen is normal.

Operation Checklist
For a safe and pleasurable heating experience, perform this check before each use.
Before Operating:

1. I am familiar with entire owner’s manual and understand all precautions noted.
2. All components are properly assembled, intact and operable.
3. No alterations have been made.
4. All gas connections are secure and do not leak.
5. Wind velocity is below 10 mph.
6. Unit will operate at reduced efficiency below 40°F.
7. Heater is outdoors (outside any enclosure).
8. There is adequate fresh air ventilation.

9. Heater is away from gasoline or other flammable liquids or vapors.
10. Heater is away from windows, air intake openings, sprinklers and other water sources.
11. Heater is at least 24 in. on top and at least 36 in. on sides from combustible materials.
12. Heater is on a hard and level surface.
13. There are no signs of spider or insect nests.
14. All burner passages are clear.
15. All air circulation passages are clear.
16. Children and adults should be alerted to the hazards of high surface temperatures and should stay away to avoid burns or clothing ignition.
17. Young children should be carefully supervised when they are in the area of the heater.
18. Clothing or other protective material should not be hung from the heater, or placed on or near the heater.
19. Any guard or other protective device removed for servicing the heater must be replaced prior to operating the heater.
20. Installation and repair should be done by a qualified service person. The heater should be inspected before use and at least annually by a qualified service person.
21. More frequent cleaning may be required as necessary. It is imperative that control compartment, burner and circulating air passageways of the heater be kept clean.

After Operation

1. Gas control is in OFF position.
2. Gas Tank valve is OFF.
3. Disconnect Gas line.

CARE AND MAINTENANCE

⚠ WARNING

FOR YOUR SAFETY:
• Do NOT touch or move heater for at least 45 minutes after use.
• Reflector is hot to the touch.
• Allow reflector to cool before touching.

To enjoy years of outstanding performance from your heater, make sure you perform the following maintenance activities on a regular basis:
Keep exterior surfaces clean.
1. Use warm soapy water for cleaning. Never use flammable or corrosive cleaning agents.
2. While cleaning your unit, be sure to keep the area around the burner and pilot assembly dry at all times. Do not submerge the control valve assembly. If the gas control is submerged in water, do NOT use it. It must be replaced.
a. Keep the appliance area clear and free from combustible materials, gasoline and other flammable vapors and liquids.
b. Do not obstruct the flow of combustion and ventilation air.
c. Keep the ventilation opening(s) of the cylinder enclosure free and clear from debris.
3. Air flow must be unobstructed. Keep controls, burner, and circulating air passageways clean. Signs of possible blockage include:

Visually checking portions of the hose assembly located within the confines of the heater post. Inspect the entire hose assembly at least annually, disassembling the reflector and burner. Inspect the hose assembly for evidence of excessive abrasion, cuts, or wear. Suspected areas should be leak tested. Then assembling the reflector and burner again following with step 6 and 7.

- Gas odor with extreme yellow tipping of flame.
- Heater does NOT reach the desired temperature.
- Heater glow is excessively uneven.
- Heater makes popping noises.

- Spiders and insects can nest in burner or orifices. This dangerous condition can damage heater and render it unsafe for use. Clean burner holes by using a heavy-duty pipe cleaner. Compressed air may help clear away smaller particles.
- Carbon deposits may create a fire hazard. Clean dome and burner screen with warm soapy water if any carbon deposits develop.

Note: In a salt-air environment (such as near an ocean), corrosion occurs more quickly than normal. Frequently check for corroded areas and repair them promptly.

TIP:
Use high-quality automobile wax to help maintain the appearance of your heater. Apply to exterior surfaces from the pole down. Do not apply to emitter screen or domes.

Storage
Between uses:
- Turn Control Knob OFF.
- Disconnect LP source.
- Store heater upright in an area sheltered from direct contact with inclement weather (such as rain, sleet, hail, snow, dust and debris).
- If desired, cover heater to protect exterior surfaces and to help prevent build-up in air passages.

Note: Wait until heater is cool before covering.

During periods of extended inactivity or when transporting:
- Turn Control Knob OFF.
- Disconnect LP source and move to a secure, well-ventilated location outdoors.
- Store heater upright in an area sheltered from direct contact with inclement weather (such as rain, sleet, hail, snow, dust and debris).
- If desired, cover heater to protect exterior surfaces and to help prevent build-up in air passages. Never leave LP cylinder exposed to direct sunlight or excessive heat.

Note: Wait until heater is cool before covering.

Service
Only a qualified service person should repair gas passages and associated components.

Caution: Always allow heater to cool before attempting service.

PROBLEM	POSSIBLE CAUSE	CORRECTIVE ACTION
Pilot won't light Note: Heater operates at reduced efficiency below 40ºF (5ºC)	Cylinder valve is closed	Open valve
	Blockage in orifice or pilot tube	Clean or replace orifice or pilot tube
	Air in gas line	Open gas line and bleed it (pressing control knob in) for not more than 1 - 2 minutes or until you smell gas
	Low gas pressure with cylinder valve fully open	Turn cylinder valve OFF and replace cylinder
	Igniter fails	Use match to light pilot; obtain new igniter and replace
Pilot won't stay lit	Dirt built up around pilot	Clean dirt from around pilot
	Connection between gas valve and pilot assembly is loose	Tighten connection and perform leak check
	Thermocouple is not operating correctly	Replace thermocouple
Burner won't light	Propane cylinder is frosted over	Wait until the propane cylinder warms up and becomes unfrosted
	Blockage in orifice	Clear blockage
	Control knob is not in ON position	Turn control knob to ON
Burner flame is low	Gas pressure is low	Turn cylinder valve OFF and replace cylinder
	Outdoor temperature is less than 40ºF and tank is less than 1/4 full	Use a full cylinder
	Control knob fully ON	Check burner and orifices for blockage
Carbon build-up Thick black smoke	Dirt or film on reflector and burner screen	Clean reflector and burner screen
	Blockage in burner	Remove blockage and clean burner inside and outside

ONE-YEAR LIMITED WARRANTY

This product is inspected, tested and carefully packaged to minimize the chance of damage during shipment. If a part within one year from the date of purchase proves to be defective in material or fabrication under normal use, the part will be repaired or replaced. The Company's obligation under the warranty is to replace or repair defective parts at our discretion. Any expenses or damage resulting from the installation, removal or transportation of the product will the responsibility of the owner and are not covered by this warranty. The owner assumes all other risks arising out from the use or misuse of the product. The warranty will be void if the product damage or failure is deemed by the Company to be caused by accident, alteration, misuse, abuse, incorrect installation or removal, or connection to an incorrect power source by the owner. The Company neither assumes, nor authorizes any person or entity to assume for it any obligation or liability associated with its products.

CARE AND MAINTENANCE

Follow the instructions for the product's material to ensure it stays in the best shape as long as possible. The information below is a general guideline. Don't hesitate to get in touch with us to learn more.

• Only rinse it thoroughly with clean water to wash away dirt and grime. Never use abrasive cleansers on the furniture since they can attack the surface and leave behind scratch marks.

• For stubborn grime and stains, use a soft sponge and mild soapy water. Then dry it with a cloth or paper towel.

The method of cleaning the glass tube with balls:

1. Remove the protective net and take out the glass tube.
2. Find a round stick that is the same length as the glass tube.
3. Soak a drying cloth in soapy water, squeeze out the excess water, and remove it.
4. Tie the drying cloth to the end of the round stick.
5. While cleaning, wipe up and down and left and right to remove the balls from the glass tube.
6. Reinstall the glass tube once it is dry.

• Check the stability of the screws, nuts, and nut caps before each use. Then, tighten them up after one to two months' use whenever required.

• Avoid improper use, and be careful not to scratch or damage the surface with sharp objects.

• When you move your furniture, lift it rather than pulling or pushing it to avoid damaging the floor, legs, and mounting.

Thanks for purchasing NUUGARDEN furniture. We are here to help you maximize your enjoyment and appreciation of it.

Please do not hesitate to contact our customer service if you have any questions regarding assembly or accessories.

Add: 6366 Corley Road, Norcross, GA 30071.

Tel: (800) 257-7108

Web: https://nuumart.com

E-mail: service@nuugarden.com

Service time: Mon-Fri, 8:30 AM-5:30 PM, EST

NUUGARDEN USA

NUU GARDEN®

ENJOY LIFE · SHARE HAPPINESS

Nuu Garden Corp.

Add: 6366 Corley Road, Norcross GA 30071.
Tel: (800) 257-7108
Web: https://nuumart.com
E-mail: service@nuugarden.com