INSTALLATION MANUAL & OPERATION INSTRUCTIONS

INSTALLATION MANUAL

Heavy-Duty ATV, UTV, Motorcycle, Trike and Commercial Lift 2500LB.

UTV-2500-60 (60" x 94-1/2" Lift Table)

UTV-2500-64 (64" x 94-1/2" Lift Table)

Your Purchase!

We reserve the right to make changes in specifications without notice and without making changes retroactive.

To help prevent possible serious injury and / or death, Carefully read this manual and review all warnings and instructions before use!

INSTALLATION & MAINTENANCE MANUAL FOR

(2,500 POUND MAXIMUM CAPACITY)

(Catalog Number: UTV-2500-60 / UTV-2500-64)

1.0 Introduction **3-4**
1.1 Intended Use 3
1.2 Dimension Diagram 4
2.0 General Safety **5-6**
2.1 Level of Danger 5
2.2 Hazards / Warnings 5
2.3 Safety Instructions 6
3.0 Safety Warnings **7-8**
4.0 Installation **9-12**
4.1 Tools For Installation 9
4.2 Assembly Installation 10
4.3 Determine Proper Lift Location 10
4.4 Unpacking & Setup 10
4.5 Vise Installation 11
4.6 Side Extension Installation 12
5.0 Operating Instructions **13-14**
5.1 Check The Safety Lock Assembly 13
5.2 To Position, Lifting And Lowering Vehicles and Equipment on Lift 13-14
6.0 Maintenance **15-16**
6.0 Maintenance Schedule 15
6.1 Daily Operation Precheck 15
6.2 Weekly Maintenance 16
6.3 6 Month Annual Maintenance 16
6.4 Pneumatic Maintenance: Authorized Technician 16
7.0 Diagrams **17-18**
7.1 Parts Breakdown 17
7.2 Parts Breakdown for Cylinder 18

1.0 Introduction

Thank you for purchasing this lift! This machine has been constructed using some of the highest manufacturing standards of today. This manual has been made in order to supply the owner as well as the user with basic instructions for the correct installation and use of this lift. The owner of this equipment is responsible to ensure that this lift is installed and operated using the guidelines set forth in this manual, failure to comply may result in voiding of this equipment's warranty.

Read this guide thoroughly before installing or using the machine. This guide contains the instructions for installation, use and maintenance of the UTV-2500 -60 & UTV-2500-64 UTV Lift.

This lift was designed for the sole purpose of performing service, repairing and inspection on small equipment such as Motorcycles, ATVs, UTVs, Riding Mowers, Commercial Mowers, Trikes, etc. Any other use not described is to be considered as improper use, and thus it will be under the whole responsibility of the owner/operator and not covered under any warranties or damage that may occur.

Follow the instructions in this guide carefully to ensure proper function, efficiency and a long operational life. Keep this guide as well as all the supplied technical literature in a safe place close to the lift so that operators are able to consult it whenever necessary. The technical literature is an integral part of the machine and it must always stay with the product, even in case of sale.

Follow the directions given by this guide with the utmost attention: the seller is not responsible for any damage due to negligence and non-observance of the herewith-contained instructions. The non-observance of herewith-contained instructions will automatically involve the immediate lapse of warranty.

1.1 Intended Use

This lift must only be used in the manner for which it is expressly designed. Any other use of this equipment not described in this manual is dangerous and should be avoided. The seller cannot be held responsible for any damage or injury caused by the improper use or by the non-observance of the instructions within this manual:

- ***The lift must be installed using the specifications in this manual.***
- ***The owner and all operators must be familiar with all of the operational guidelines laid out within this manual.***
- ***The technical literature is an integral part of the machine. Read this guide carefully before installing or operating this machine, important safety rules for installation, operation and maintenance are enclosed.***

KEEP THIS AS WELL AS ALL OTHER TECHNICAL LITERATURE IN A SAFE PLACE AND CONSULT WHENEVER NECESSARY!

1.2 Dimensional Diagram

SIDE VIEW FOR UTV-2500-60 & UTV-2500-64

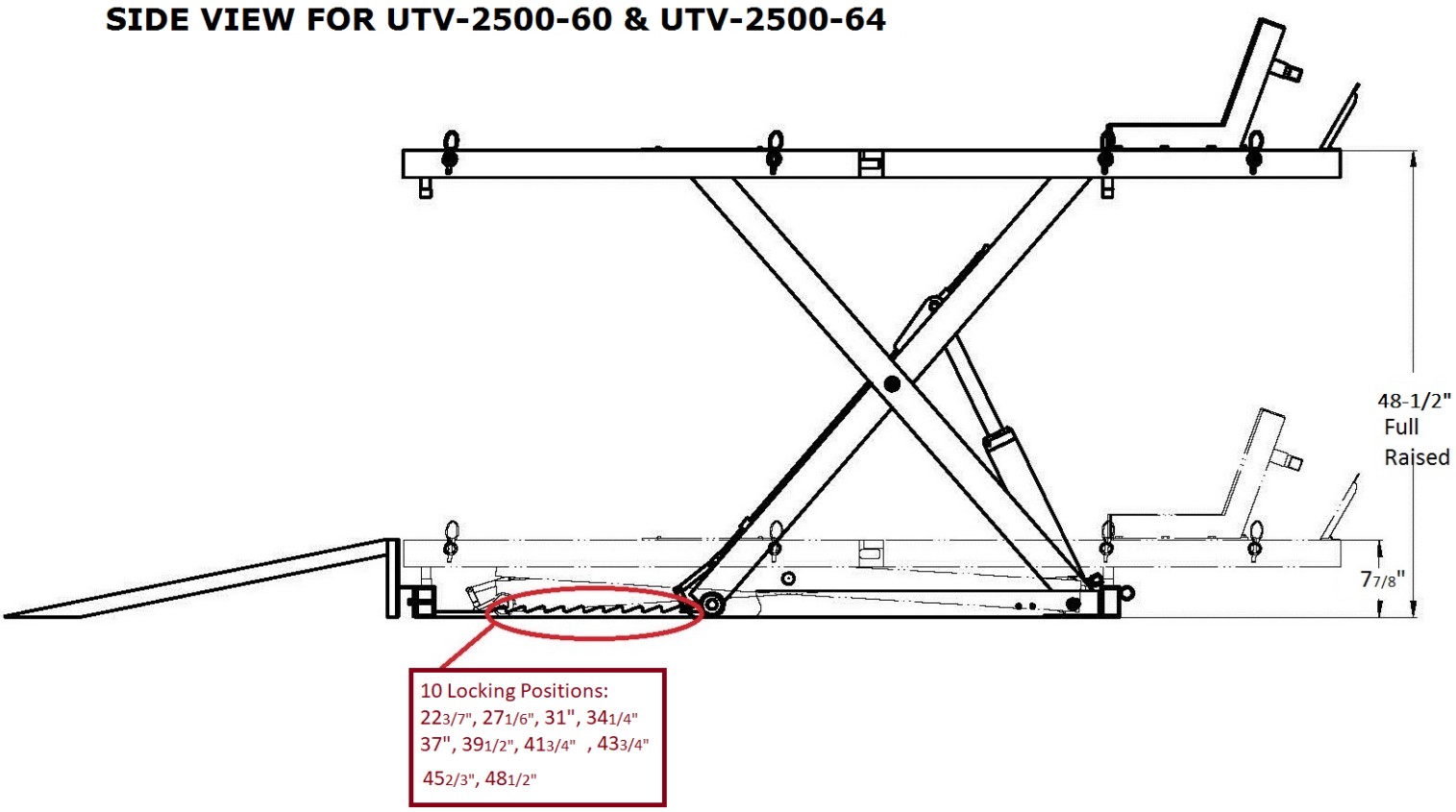

TOP VIEW FOR UTV-2500-60 & UTV-2500-64

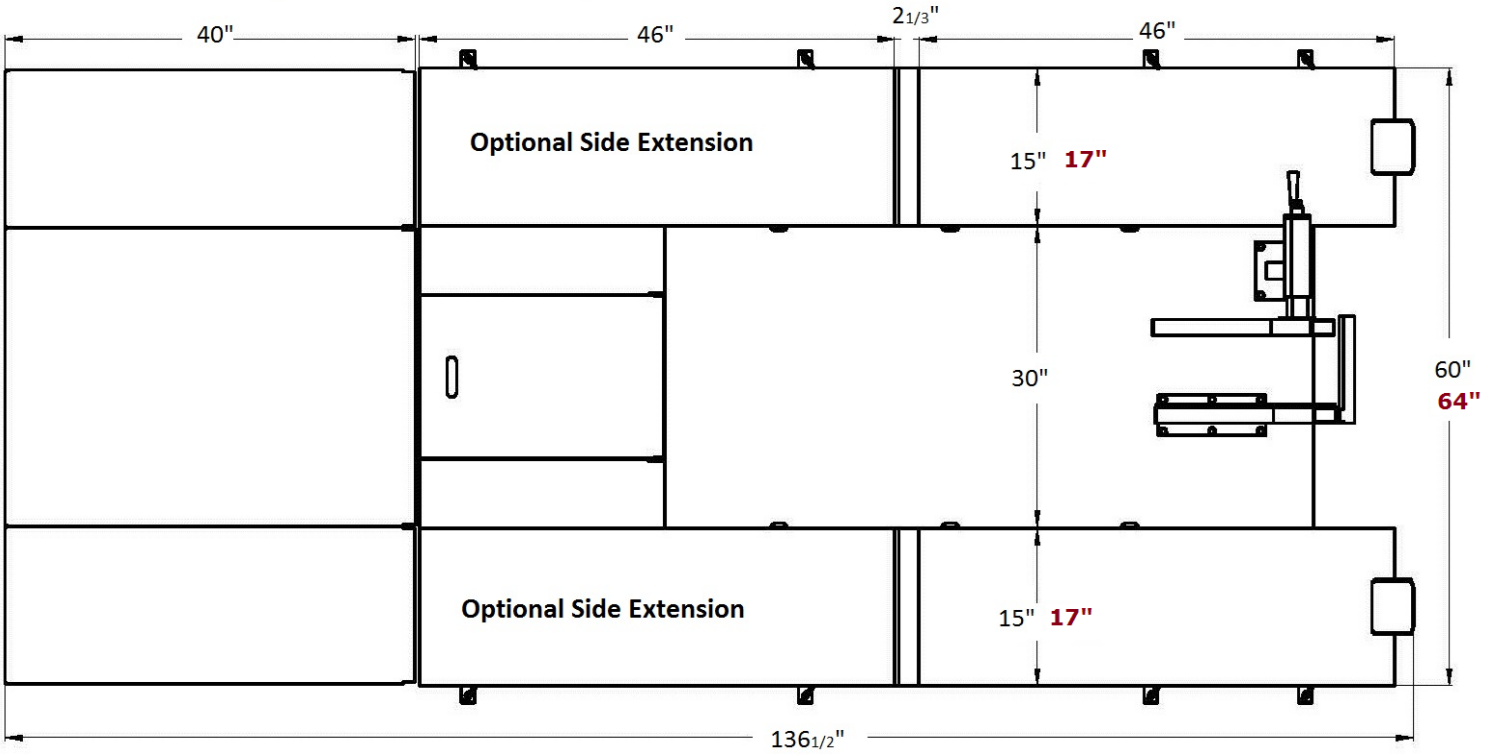

2.1 Level of Danger

Whenever you find the following warning sign in this guide, pay the utmost attention and follow the relevant safety rules.

ATTENTION: Read the following directions with the utmost attention. Non-observance of described procedures/practices can cause serious damages to bystanders.

2.2 HAZARDS / WARNINGS

IN THE EVENT THE RAISED EQUIPMENT FALLS FROM THE LIFT, RUN AWAY TO A SAFE DISTANCE.

DO NOT STAND UNDER EQUIPMENT ON THE LIFT WHILE LIFT IS OPERATING.

DEATH OR SERIOUS INJURY MAY OCCUR.

DO NOT LIFT ONE SIDE OF THE EQUIPMENT.

POSSIBILITY OF EQUIPMENT OVERTURN AND/OR DAMAGE TO LIFT MAY HAPPEN.

DO NOT PLACE ANY POLES UNDER EQUIPMENT AND LOWER IT TO DISMANTLE THE PART FROM THE RAISED EQUIPMENT.

DO NOT MODIFY ANY SAFETY SYSTEMS OF THIS LIFT.

IF SAFETY DEVICE MALFUNCTIONS, SERIOUS ACCIDENT MAY OCCUR.

DO NOT EXCESSIVELY SHAKE RAISED EQUIPMENT.

DANGER OF EQUIPMENT FALLING FROM LIFT MAY OCCUR.

DO NOT PLACE FEET, HANDS OR ANY PART OF BODY UNDER ANY MOVING PART OF LIFT WHILE RAISING OR LOWERING.

DO NOT OPERATE A LIFT WITH PEOPLE ON IT.

IF AROUND ELECTRICAL COMPONENTS, ELECTRICAL SHOCK MAY OCCUR.

AUTHORIZED PERSONNEL ONLY IN LIFT AREA.

DO NOT SPRAY WATER DIRECTLY ONTO LIFT.

STOP RAISING LIFT WHEN IMBALANCE IS DETECTED WHILE RASING EQUIPMENT

DO NOT OPERATE LIFT WHEN HYDRAULIC OIL LEAK IS DETECTED IN THE LIFT AREA

2.3 Safety Instructions

The messages and pictures shown are generic in nature and are meant to generally represent hazards common to all automotive lifts regardless of specific style.

READ OPERATING AND SAFETY MANUALS BEFORE USING LIFT!

DO NOT OPERATE A DAMAGED LIFT!

PROPER MAINTENANCE AND INSPECTION ARE NECESSARY FOR SAFE OPERATION DAILY!

LIFT TO BE USED BY TRAINED OPERATOR ONLY!

3.0 Safety Warnings

CAREFULLY READ ALL INSTRUCTIONS BEFORE ATTEMPTING TO INSTALL OR OPERATE THIS LIFT!

Failure to follow all instructions listed in the following pages may result in electric shock, fire, and / or serious injury.

1. Keep work area clean and well lit. Cluttered, wet, and dark work areas invite accidents.
2. Keep bystanders, children, and visitors away while operating this lift. Distractions can cause you to lose control of the equipment.
3. Stay alert watch what you are doing ,and use common sense when operating this lift. **DO NOT** use this lift while fatigued or under the influence of drugs, alcohol, or medication. A moment of inattention while operating this lift may result in serious personal injury.
4. **RISK OF ENTANGLEMENT!** Dress properly. **DO NOT** wear loose clothing or jewelry. Contain long hair. Keep your hair, clothing, and gloves away from moving parts. Loose clothes, jewelry, or long hair can be caught in moving parts.
5. Remove adjusting keys or wrenches before using this lift. A wrench or a key that is left attached to a moving part of the lift can cause damage to the lift or serious accidents.
6. **DO NOT** overreach. Keep proper footing and balance at all times. Proper footing and balance enables better control of this lift in unexpected circumstances.
7. Use safety equipment. Always wear OSHA approved safety impact eye goggles underneath a full face shield.
8. Only trained and authorized personnel should position equipment for lifting and operate this lift.
9. Use clamps (not included) or other practical ways to secure and support the work piece to a stable platform. Holding the work by hand or against your body is unstable and may lead to loss of control. Always use Tie Down Eyelets provided for securing equipment.
10. Check for misalignment or binding of moving parts, breakage of parts, and any other condition that may affect the equipment's operation. If damaged, have the equipment serviced before using. Many accidents are caused by poorly maintained equipment.
11. Use only accessories that are recommended by the manufacturer for your model. Accessories that may be suitable for one lift may become hazardous when used on another lift.
12. Service must be performed only by authorized qualified repair personnel. Service or maintenance performed by unqualified personnel could result in a risk of injury.
13. When servicing, use only identical replacement parts. Follow instructions in the "INSPECTION, MAINTENANCE, AND CLEANING" section of this manual. Use of unauthorized parts or failure to follow maintenance instructions may create a risk of electric shock or injury.
14. **DANGER!** Make sure you know the weight of the equipment you are going to lift before using the Lift. Do not exceed the maximum lift capacity (2,500 pounds) for the Lift. Overloading the Lift could cause personal injury and / or property damage. Be aware of dynamic loading! If a weight suddenly falls onto the Lift. It may create for a brief instant an excess load which may result in personal injury and / or damage to the equipment and Lift. This Lift should be loaded only in the center of the Lift itself, from front to rear and in line with the clamping vise.
15. Use the Lift only in well ventilated areas. Carbon monoxide exhausted from running equipment engines is a colorless, odorless fume that, if inhaled, can cause serious personal injury.
16. Make sure to read and understand all instructions and safety precautions as outlined in the manufacturer's manual for the equipment you are lifting. Always use the manufacturer's recommended lifting points.
17. **DO NOT** use the Lift on any asphalt surface. Make sure the Lift used on a dry, oil/grease free, flat, level, concrete surface capable of supporting the weight of the Lift. **DO NOT** use the Lift on concrete expansion seams or on cracked, defective concrete.
18. Always examine the Lift for structural cracks, bends, damage to the hoses, and any other condition that may affect the safe operation of the Lift. **DO NOT** use the Lift even if minor damage is detected.
19. Prior to beginning a job, make sure the Safety Lock Assembly and its Safety Catches are in the proper position. Never work underneath equipment without using additional safety support devices such as tri-pod stands to support the Lift.
20. Always keep hands, fingers, and feet away from the moving parts of the Lift when applying or releasing a load. Remain clear of the Lift when raising or lowering equipment.
21. Use extreme caution when applying or releasing a load. Never allow the load to suddenly release. Slowly and carefully apply and release the load the Air Foot Pedal.
22. Never leave the Lift unattended when the Lift is loaded.
23. Never drive equipment onto or off of the Lift make sure the Lift is fully lowered.
    Never lift equipment with anyone inside it. **DO NOT** allow others in the lift area while operation the Lift. **DO NOT** allow anyone to ride on the Lift while it is being raised or lowered. **DO NOT** ride any equipment on the lift, they should be pushed onto the lift without a passenger.
24. **DO NOT** use the Lift as a permanent stand for equipment. Use the Lift only while making repairs. Then, immediately remove the equipment from the Lift.
25. Before lowering the Lift, make sure tool trays, stands, and all other tools and equipment are removed from under the equipment and the Lift.
26. **DO NOT** allow tearing the warning labels or other labels off the lift

3.0 Safety Warnings

The warnings, precautions, and instructions discussed in this manual cannot cover all possible conditions and situations that may occur. The operator must understand that common sense and caution are factors which cannot be built into this product, but must be supplied by the operator.

ONLY AFTER CAREFULLY READING ALL OF THE PRECEDING SAFETY WARNINGS SHOULD YOU ATTEMPT TO INSTALL OR OPERATE THIS LIFT!

Improper installation or operation can cause injury or damage!

1. **Read this installation and operation manual in its entirety before attempting to install the lift.** Manufacturer or Distributor assumes no responsibility for loss or damage of any kind, expressed or implied, resulting from improper installation or use of this lift. Always use an authorized professional installer.
2. All persons using this equipment must be responsible, qualified, and carefully follow the operation and safety guidelines contained in this manual.
3. A level floor is required for proper lift installation and operation.
4. **DO NOT** install this lift on any asphalt surface. Only on concrete surface a minimum of 6" thick and 3,000 psi tensile strength with steel or fiber mesh reinforcement.
5. **DO NOT** install this lift over concrete expansion joints or cracks. (Check with your building architect.)
6. **DO NOT** install this lift on an upper floor without written authorization from your building architect. Should only be installed on a basement floor.
7. **DO NOT** attempt to lift only part of the equipment. This lift is intended to raise the entire body of the equipment only.
8. **NEVER lift any persons or equipment containing persons.** This lift is designed to lift empty equipment only.

4.0 READ THIS BEFORE INSTALLING THE LIFT

Improper installation can cause injury or damage!

1. **Read this installation and operation manual in its entirety before attempting to install the lift.** Manufacturer or Distributor assumes no responsibility for loss or damage of any kind, expressed or implied, resulting from improper installation or use of this lift. Always use a authorized professional installer.

2. All persons using this equipment must be responsible, qualified, and carefully follow the operation and safety guidelines contained in this manual.

3. A level floor is required for proper lift installation and operation.

4. **DO NOT** attempt to lift only part of a load. This lift is intended to raise the entire load only. This will bend the table/cause damage and void the warranty.

5. **NEVER lift any persons or equipment containing persons.** This lift is designed to lift empty equipment only.

4.1 TOOLS FOR INSTALLATION

Rubber Hammer
Sockets and Open End Wrenches
Ratchet Driver
Vice Grips

4.2 ASSEMBLY INSTRUCTIONS

NOTE: For additional references to the parts listed in the following pages, refer to the Assembly Diagrams.

4.3 Determine the Proper Lift Location:

1. DO NOT use the Lift on any asphalt surface. Make sure the Lift is used on a dry, oil/grease free, flat, level, concrete surface capable of supporting the weight of the Lift and the equipment. Do not use the Lift on concrete expansion seams or on cracked, defective concrete.
2. Make sure to check the desired location for possible obstructions such as a low ceiling, overhead lines, adequate working area, access ways, exits, etc.

4.4 Unpacking & Setup

1. Open the shipping container, then remove the Ramp and shipping boards out of the packaging.
2. ⚠ CAREFULLY TURN TABLE UPRIGHT ON TO ITS OPERATING POSITION BEFORE REMOVING THE SHIPPING WIRE THE CABLE RESTRAINT FROM SCISSOR MECHANISM.
3. ⚠ MAKE SURE THAT THE ROLLER GUIDES CONNETCTED TO THE CYLINDER ROD ARE ON THEIR TRACKS CORRECTLY BEFORE RAISING THE LIFT!
4. Connect the hose to the fitting at the hydraulic pump and bed plate. The lift may be damaged and/or personal injury may result if the hydraulic pressure exceeds the maximum psi rating.
5. Stand clear of lift table, and depress the UP side of the foot valve to raise the Table, or press the electric switch on the electric power unit to raise the Table.
6. Place Dropout Cover over Dropout opening.
7. Insert the main ramp to the end of Desk plate.

4.5 VISE INSTALLATION AND EYE BOLTS

The Front Wheel Clamp mounts directly onto the front of either the Table Assembly or the Front Extension, depending on which configuration you prefer to set your lift up in (There are 2 positions on the Front Extension for mounting - allowing 3 separate configurations). Simply bolt the Movable Clamp onto the left side of the Lift as you look at it from the rear using the provided bolts. Next, mount the Fixed Clamp onto the right side of the lift. The UTV-2500 comes with an Adjustable Front Wheel Stop. To install this piece, simply use the pin provider onto the front of the Table Assembly or Front Extension, again depending on which configuration you opt to use for your lift. Note: Use eye bolts to screw and fasten the equipment to the table with heavy duty straps. *Please see the pictures below for proper installation of the Wheel Vise.*

Figure 4.5

Reference pictures for proper Wheel Vise installation

4.6 SIDE EXTENSION INSTALLATION

UTV-2500SE-60
UTV-2500SE-64

The Side Extensions for the UTV-2500 are easily installed. There are 3 Long Extension Bars & 2 Short Extension Bars provided for installation which also includes a stabilizing bar. The 2 Short Extension Bars are slid into the holes on the back of the Table Assembly at the opposite end of the vise by the rear Approach Ramp. You must secure the Short Extension Bars to the Table Assembly by using 1 bolt and 1 square shaped washer in each Tube under the table to lock them in place once they are installed. The Long Extension Tube runs all the way through, underneath the front side of the Table Assembly.

You must remove both End Caps, slide the Stabilizing Bar through the square holes on the rear locking Scissor Legs and then reattach the End Caps to the Stabilizer Bar. Slide the 3 Side Extensions over the Bars and insert the Quick Pins in the appropriate holes at the end of the round Bars to secure the Table Extensions to the lift. For the Approach Ramp, use the provided bolts and nuts to secure the Ramp Extensions onto the Approach Ramp on each side.

Please see the pictures below for proper installation of the Side Extensions.

Note: SIDE EXTENSIONS ARE SOLD SEPARATELY

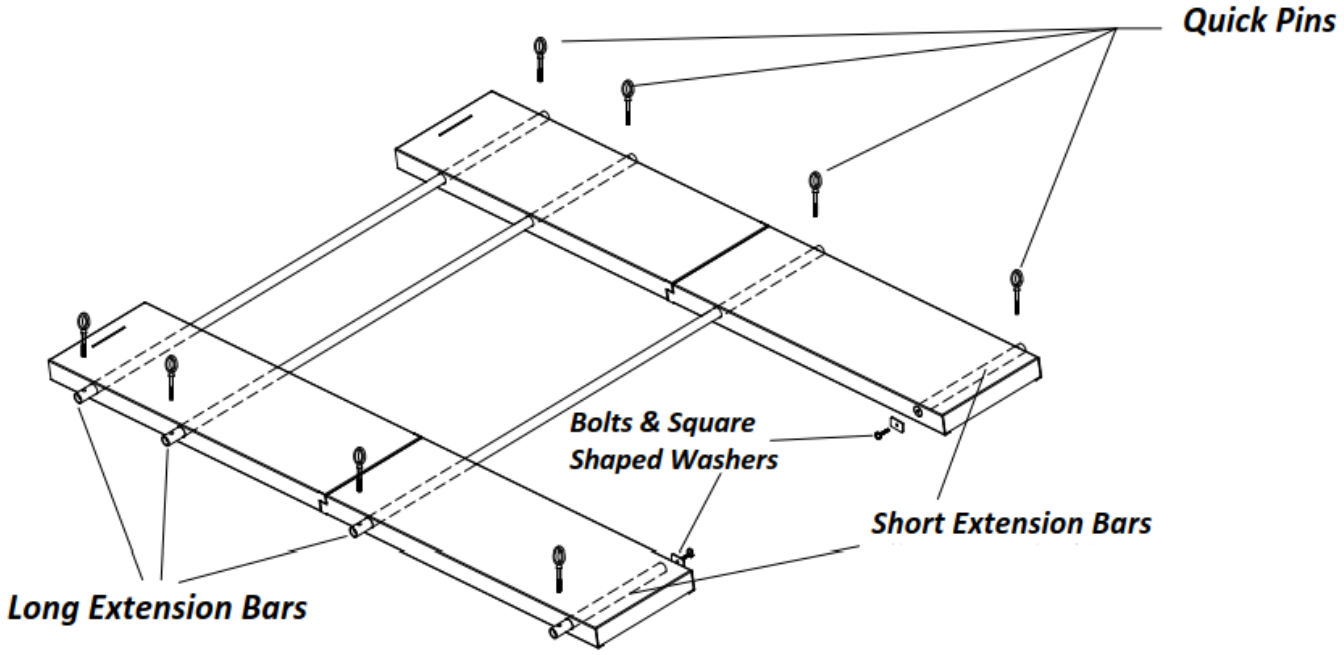

ONLY AFTER CAREFULLY READING ALL OF THE PRECEDING SAFETY WARNINGS SHOULD YOU ATTEMPT TO INSTALL OR OPERATE THIS LIFT!

Improper installation or operation can cause injury or damage!

5.1 Before First Use

1. Leave the pump for one hour to allow the oil to settle before purging the system.
2. ***FAILURE TO ALLOW SUFFICIENT TIME FOR THE OIL TO SETTLE COULD RESULT IN AIR REMAINING IN THE OIL. IN THIS EVENT, THE PUMP WILL NOT PURGE COMPLETELY FIRST TIME AND A SECOND PURGE WILL BE REQUIRED.***
3. Test the lift, empty: move the safety pull-rod to the bayonet, raise the lift to full height, hold unloading valve (Black rounded head the handle on hydraulic pump) slowly to control the rate of descent. If air unit, use foot pedal.

WARNING! Do not attempt to overload the lift.

. ***WARNING!*** The motorcycle must be fully supported by the deck plate before lifting. DO NOT put the rear wheel of the motorcycle on the main ramp and DO NOT use the main ramp to support the weight of the motorcycle when lifting.

WARNING! The main ramp is only used to help you to wheel the motorcycle onto the platform when the lift is at its lowest position.

5.2 To Position, Lift, And Lower Equipment On The Lift:

1. Before pushing equipment onto the Lift, make sure that the Lift is fully lowered, and the approach ramps are attached and resting on the floor. Also, for two-wheel equipment, ensure that the Front Wheel Vise is opened up enough to fit the equipment's front wheel. Loads must be centered on the table at all times. The center of the table is rated for a maximum load of 2,500 lbs.

2. Push the equipment over the Lift while keeping the equipment parallel with the Lift and aligning the center of gravity of the equipment with the center of the Lift. For motorcycles and other two wheel vehicles/equipment, push forward until the front wheel goes between the clamps on the Front Wheel Vise. DO NOT DRIVE EQUIPMENT ON OR OFF OF THE LIFT! PERSONAL INJURY MANY OCCUR WHILE STEPPING FOWN FROM THE EQUIPMENT AND CAN ALSO CAUSE SERIOUS DAMAGE TO THE LIFT! PUSH EQUIPMENT ON TO THE LIFT WITHOUT PASSENGERS! AGAIN NEVER DRIVE EQUIPMENT ON TO YOUR LIFT!

3. Engage the parking brake of the equipment, if applicable.

4. Once the equipment is parked, secure the equipment to the lift by tightening the Front Wheel Vise

WARNING! Make sure to only tighten the Front Wheel Cise enough to create a sung grip on the wheel! DO NOT over tighten the clamp as this can possibly damage your wheel!.

5. Before Lifting: ***Always tie down the equipment. Using straps through the tie down eyelets mounted on the lift's table surface. DO THIS EVERY TIME BEFORE OPERATIING LIFT!***

6. Connect the hose nipple element to the electric hydraulic pump and bed plate.

7. When the platform has been raised to the working height, press the emergency switch (red mushroom button 64), or if air control, the foot pedal.

NOTE: Make sure safety rod is disengaged from its stop to allow the safety plate to engage with locking mechanism at base of lift to prevent accidental lowering.

8. When work is done, remove all tools from under the lift before lowering. Raise the lift by using the electric hydraulic pump or the air hydraulic pump. Let the safety board free from its locking position, then move safety pull-rod to its locked position, SLOWLY hold unloading valve on the electric hydraulic unit (or if air control unit, use foot pedal) to GENTLY lower the lift.

NOTE: Lower the motorcycle slowly, in a controlled fashion. Never allow the motorcycle to drop quickly.

9. When the lift is fully lowered, untie the vehicle, and remove it from the lift.

10. You can now release the trap or the Front Wheel Vise, and push it off of the lift. ONCE AGAIN, ***DO NOT DRIVE EQUIPMENT ON OR OF THE LIFT!***

6.0 Maintenance Schedule

The following periodic maintenance is the suggested minimum requirements and minimum intervals; accumulated hours or monthly period, which ever comes sooner. If you hear a noise or see any indication of possible failure - cease operation immediately and inspect, correct and/or replace parts as required. Following these maintenance procedures is the key to prolonging the useful life or your lift. We highly recommend using a Authorized Technician for all repairs and modifications.

IF AT ANY TIME YOU'RE NOT SURE OF THE SAFE OPERATION OF THE LIFT, DISCONTINUE USING IT AND CALL YOUR DISTRIBUTOR FOR ASSISTANCE.

Warning OSHA and ANSI require authorized users to inspect lifting equipment at the start of every shift. These and other daily periodic inspections are the responsibility of the user.

6.1 Daily Pre-Operation Check

The user should at least perform the following checks daily.

- **Daily check of Safety Locking/Latch System is very important - the discovery of device failure could save you from expensive property damage, lost production time, serious personal injury and even death.**
- Check to insure safety latches for free movement and full engagement with lift are working.
- Check pneumatic connections, and hoses for leakage.
- Check the Cylinder Rod, if it becomes dry, lightly oil it.
- Check all bolts, nuts, and screws and tighten.
- Keep lift free of dirt, grease or any other corrosive substances.
- You should use an oil air regulator to keep the Cylinder dry and clean from contamination of the Air Compressor.
- Release the water from your Air Compressor daily to insure no water contaminates the Foot Pedal, Hose and Hydraulic Cylinder.
- The Oiler should supply a mist of oil to the Foot Peddle, Hose and Hydraulic Cylinder.

6.2 Weekly Maintenance

- Check air hoses and fittings for leaks and make sure connections are tightened.
- Check and tighten bolts, nuts, and all screws. Pivot Shaft set screws should always be checked to insure that they are tight.
- Check the Cylinder Rod, if it becomes dry, lightly oil it.
- Lubricate the grease zerks located at either end of the Pivot Shaft.
- Lubricate the grease zerks at the top end of the inside frame assembly.

6.3 Six Months Annual Maintenance

- Lubricate the grease zerks located at either end of the Pivot Shaft.
- Lubricate the grease zerks at the top end of the inside frame assembly.
- Squirt some oil through the bleed hole in the Plate End of the Cylinder to lubricate the Piston.

6.4 The following repairs should only be performed by an authorized trained maintenance expert:

- Replacement of shafts / axles.
- Replacement of roll bearings.
- Replacement or rebuilding pneumatic/air cylinders.
- Checking pneumatic cylinder rods and rod ends (threads) for deformation or damage.
- Checking cylinder mounting to make sure it’s not loose and /or damage.

Relocating or changing components may cause problems. Each component in the system must be compatible; an undersized or restricted line will cause a drop in pressure. All Foot Pedal, and hose connections should be sealed and/or capped until just before use. Air hoses can be used to clean fittings and other components. However, the air supply must be filtered and dry to prevent contamination. Most important - cleanliness - contamination is the most frequent cause of malfunction or failure of pneumatic equipment, so always use an oil/air regulator.

7.1 Parts Breakdown

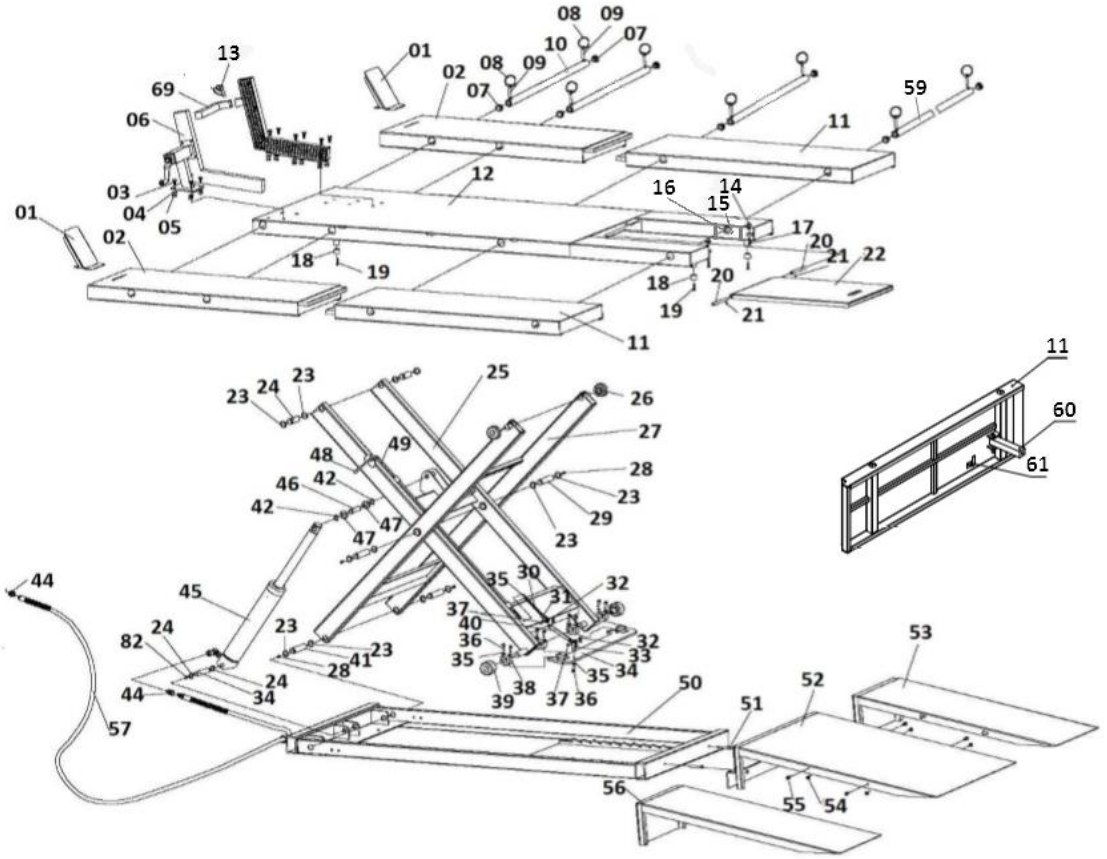

NO	DESCRIPTION	QTY	NO	DESCRIPTION	QTY	NO	DESCRIPTION	QTY
1	Baffle plate	2	21	Screw	2	41	Pin	2
2	Side extension 1	2	22	Drop out cover	1	42	Circlip	4
3	Bolt	12	23	Circlip	12	43	Pin	1
4	Washer	12	24	Pin	2	44	Hydraulic cylinder hose nippler	2
5	Nut	10	25	Inner lifting arm	1	45	Hydraulic cylinder	1
6	Tire grab	1	26	Wheel	2	46	Pin	2
7	Pipe plug	8	27	Outer lifting arm	1	47	Washer	2
8	Lifting ring	8	28	Lubricating cup	5	48	Rod cap	1
9	Washer & nut	8	29	Pin	2	49	Safety pull	1
10	Long extension bar	4	30	Spring	1	50	Bed plate	1
11	Side extension 2	2	31	Dangle hinge	1	51	Screw	2
12	Deck plate	1	32	R-pin Ⅱ	2	52	Main ramp	1
13	Pin	1	33	Inbuilt hinge	1	53	Extension ramp	2
14	Pin	2	34	Safety board	1	54	Nut	4
15	Bolt	2	35	Washer	11	55	Screw	4
16	Squared shaped washer	2	36	Bolt	9	56	American standard plug with 3m wire	1
17	Bolt	2	37	Pin	2	57	High pressure hose element	1
18	Spacing disc	4	38	Safety board base	4	58	Hydraulic cylinder hose nippler element	1
19	Screw	4	39	Wheel	2	59	Short extension bar	2
20	Pin	2	40	Rod	1	60	Support tube	2
						61	Support tube clip	2

7.2 Cylinder Parts Breakdown

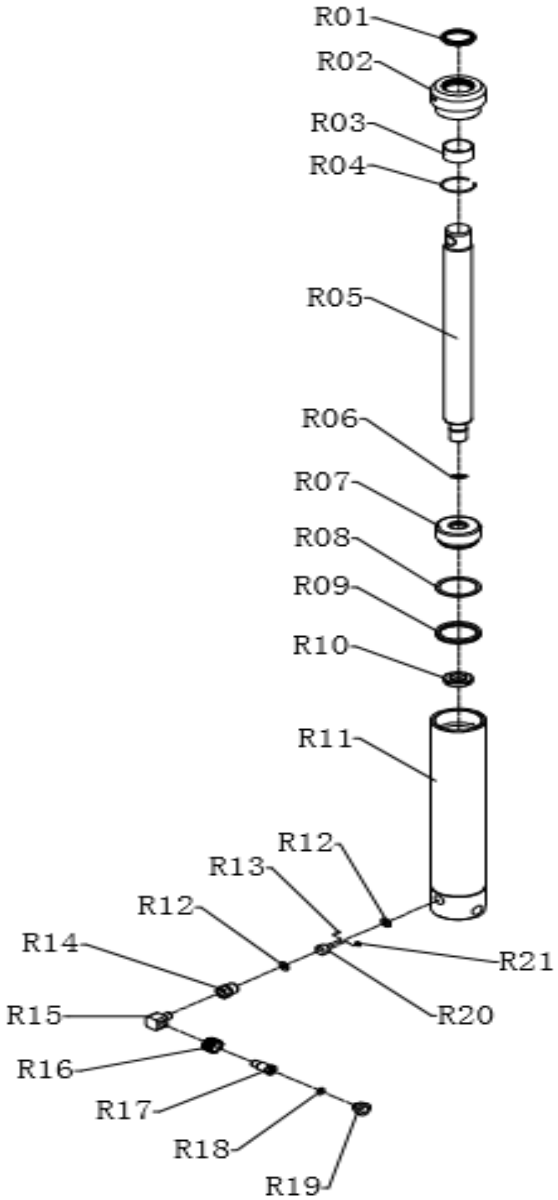

NO	DESCRIPTION	QTY	NO	DESCRIPTION	QTY	NO	DESCRIPTION	QTY
R01	Dust ring	1	R08	PTFE ring	1	R15	Adapter 2	1
R02	Top cap	1	R09	Sealing ring	1	R16	Nut	1
R03	Bearing	1	R10	Nut	1	R17	Hydraulic cylinder hose nippler element	1
R04	Circlip	1	R11	Hydraulic cylinder element	1	R18	O-ring	1
R05	Piston rod	1	R12	Gasket	2	R19	Dust cap	1
R06	O-ring	1	R13	Ball	1	R20	Valve plates	1
R07	Ram head	1	R14	Adapter	1	R21	Strainer	1