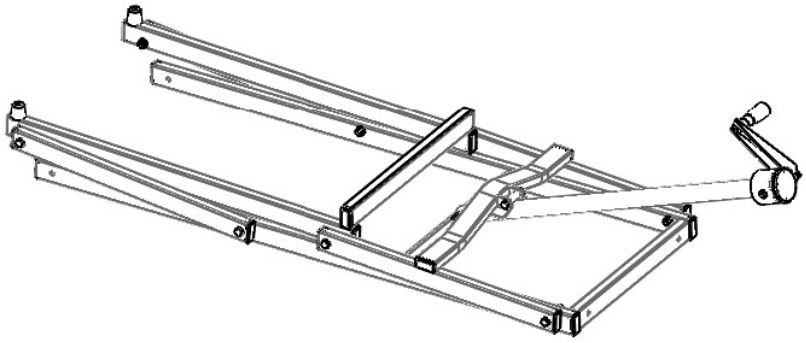

Deluxe Snowmobile Lift & Work Stand

700 LB Capacity

Instructions for Part #SNO-6014

GENERAL GUIDELINES & SAFETY ⚠

- It is the user's responsibility to read and follow all instructions
- Keep these instructions with the product at all times and review before each use
- It is the responsibility of this product's owner to furnish the instructions to any person that borrows or purchases the product
- Inspect the product before use to ensure it is assembled properly and all parts are in safe working order and free of defects
- Never modify this product in any way
- All circumstances cannot be addressed in these instructions
- Please use common sense and practice general safety measures when using this product
- Parts and/or instructions are subject to change without notice
- When using a drill to raise or lower the lift use low to medium-low speed setting
- Do not run the snowmobile motor while in place
- For use with unoccupied snowmobiles only
- Do not exceed capacity of 700 lbs

PARTS

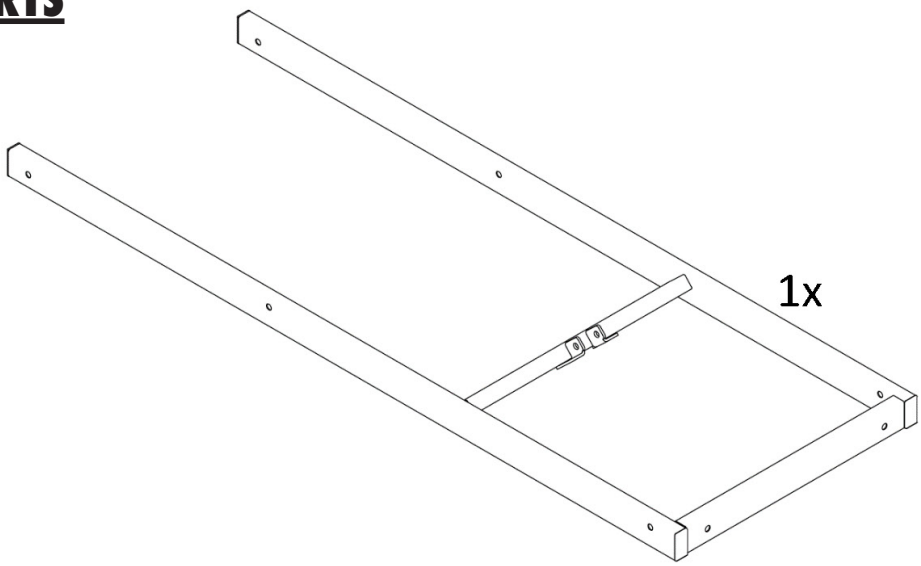

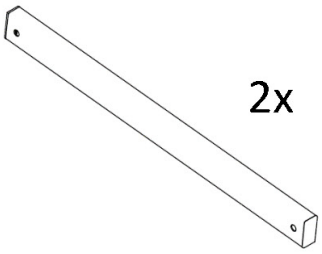

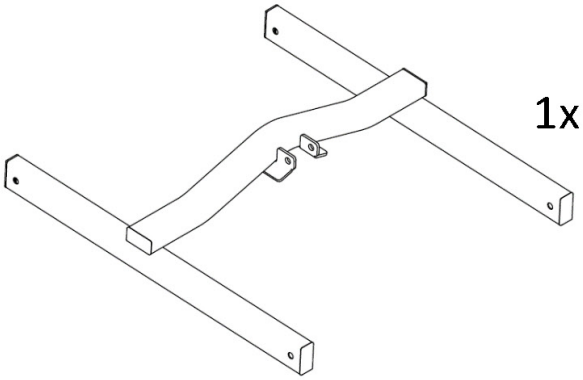

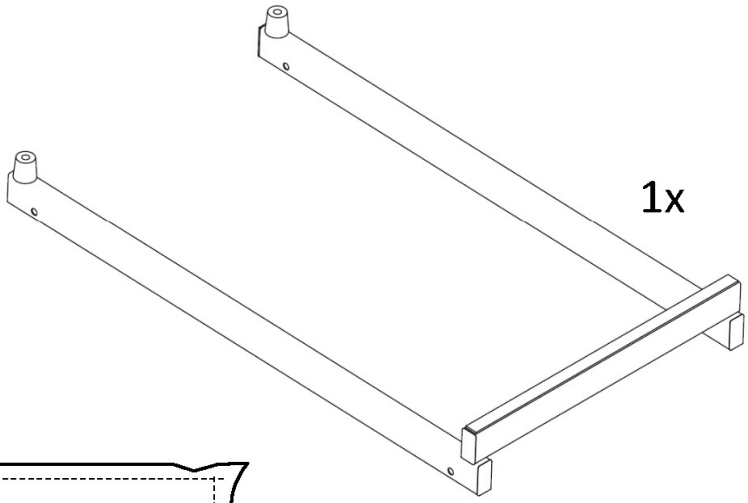

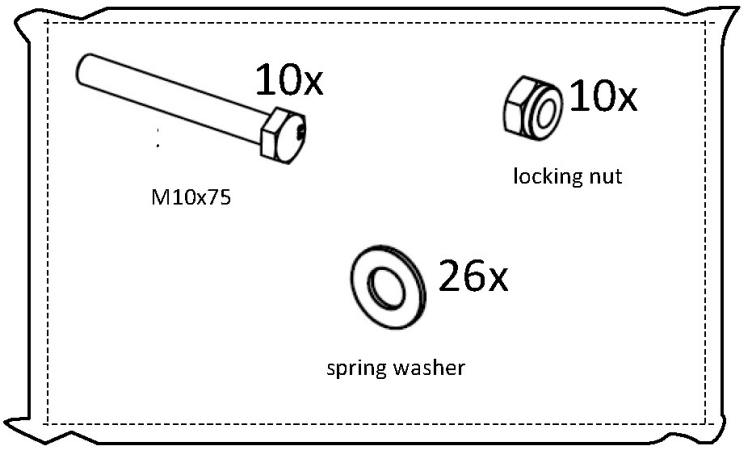

TOOLS REQUIRED (NOT INCLUDED)

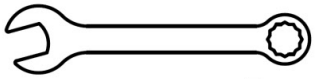

2x

17mm

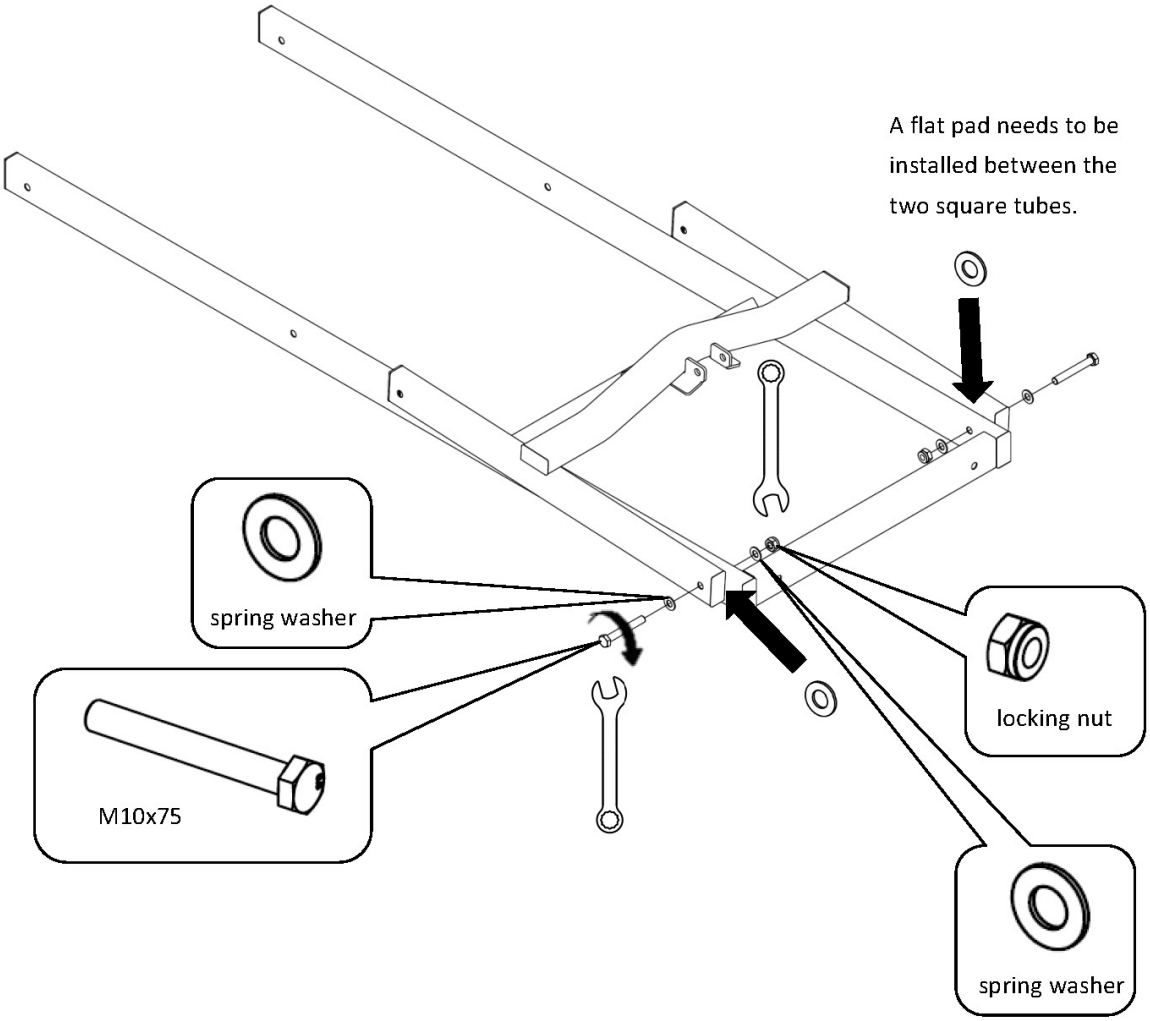
A flat pad needs to be installed between the two square tubes.
spring washer
M10x75
locking nut
spring washer

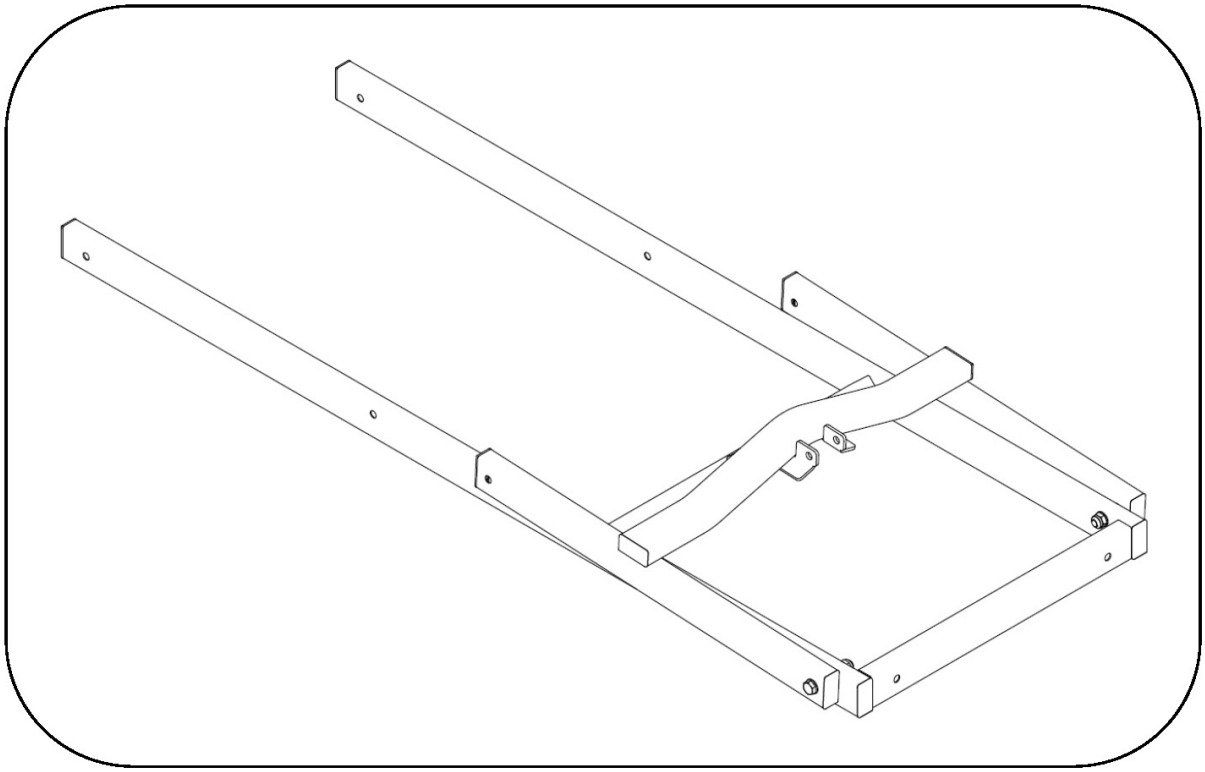

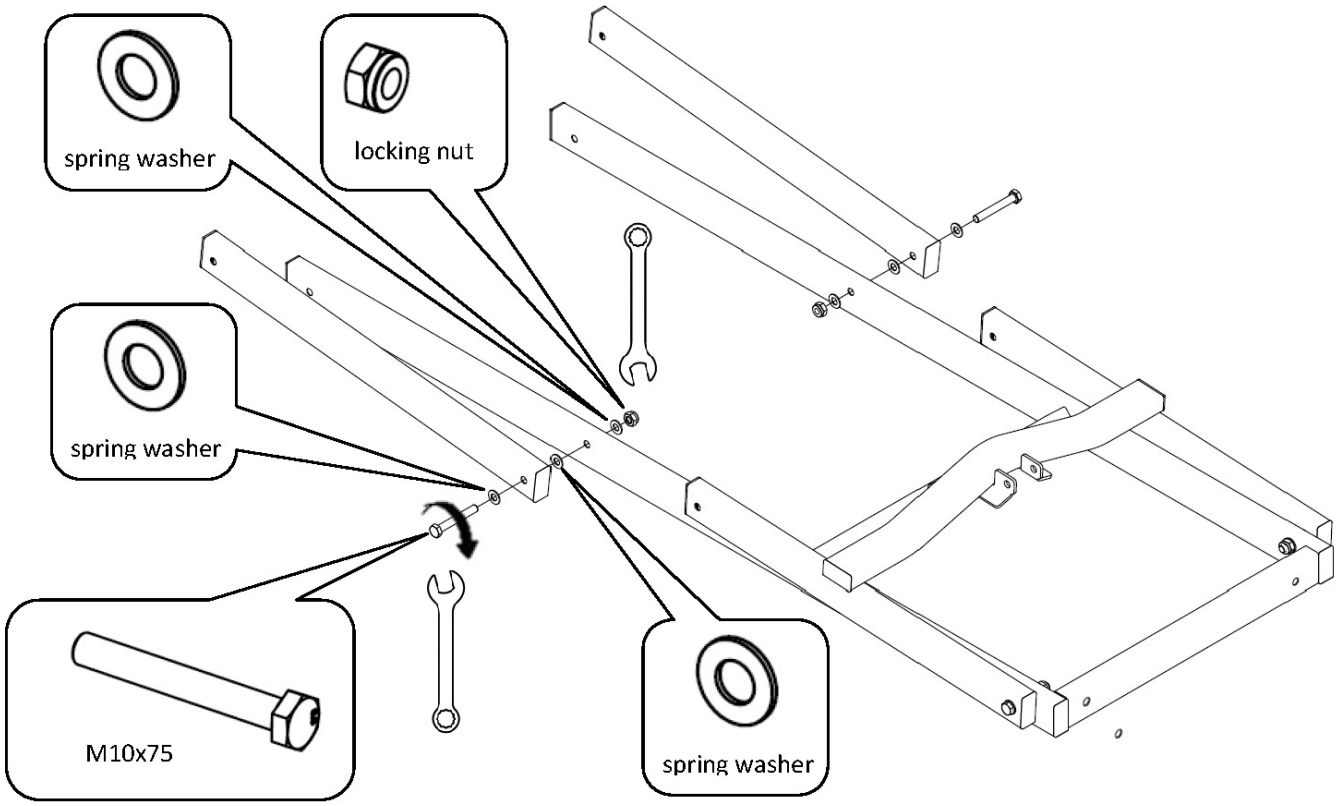
spring washer
locking nut
spring washer
M10x75
spring washer

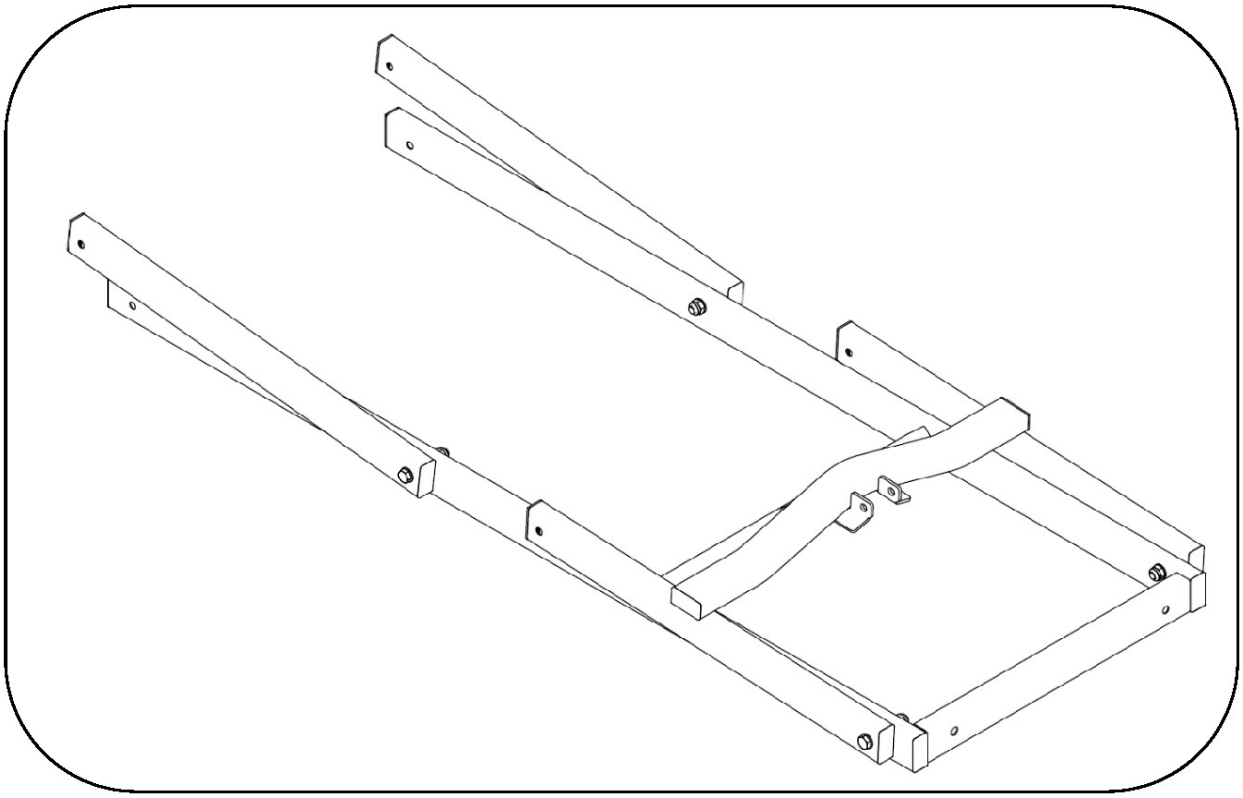

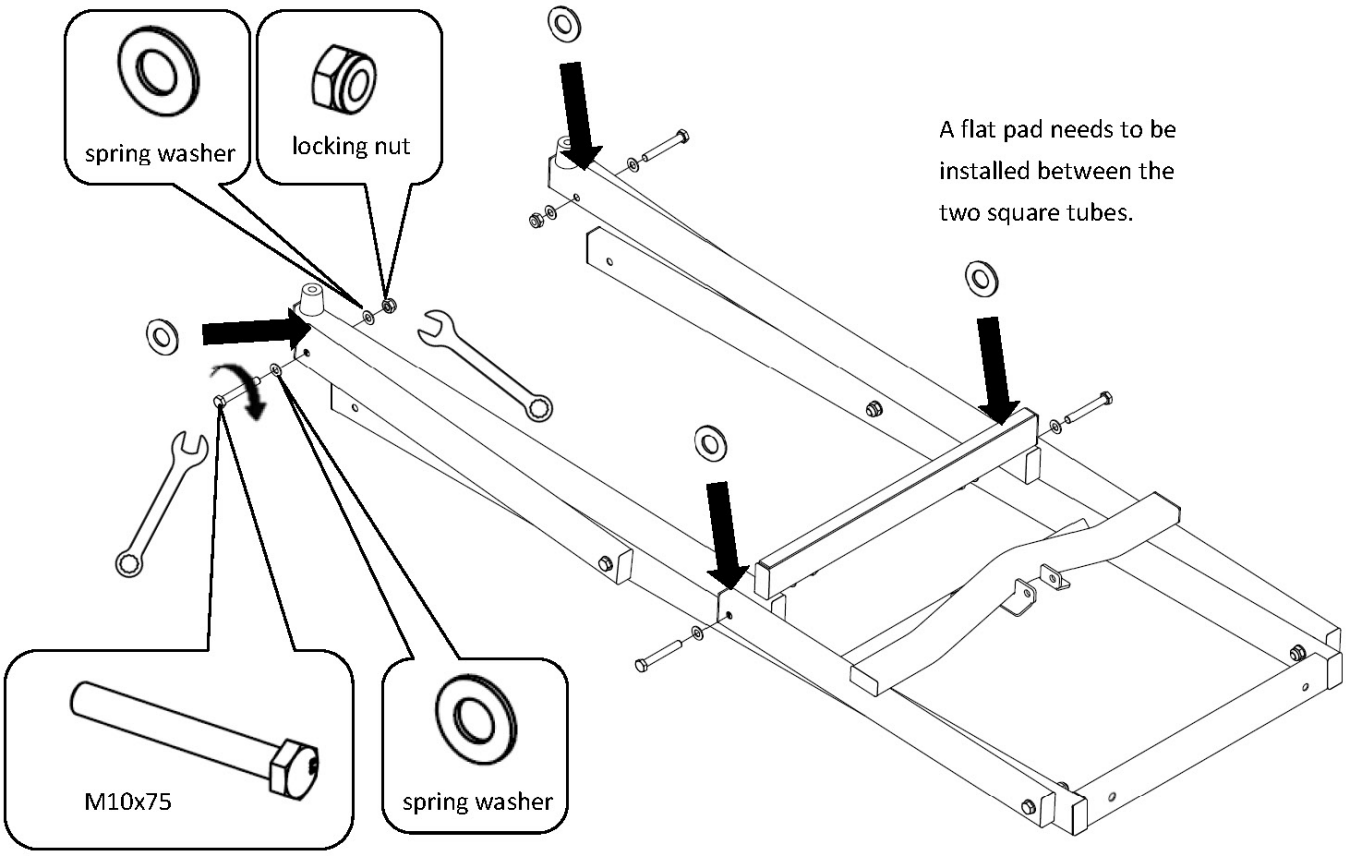
spring washer
locking nut
A flat pad needs to be installed between the two square tubes.
M10x75
spring washer

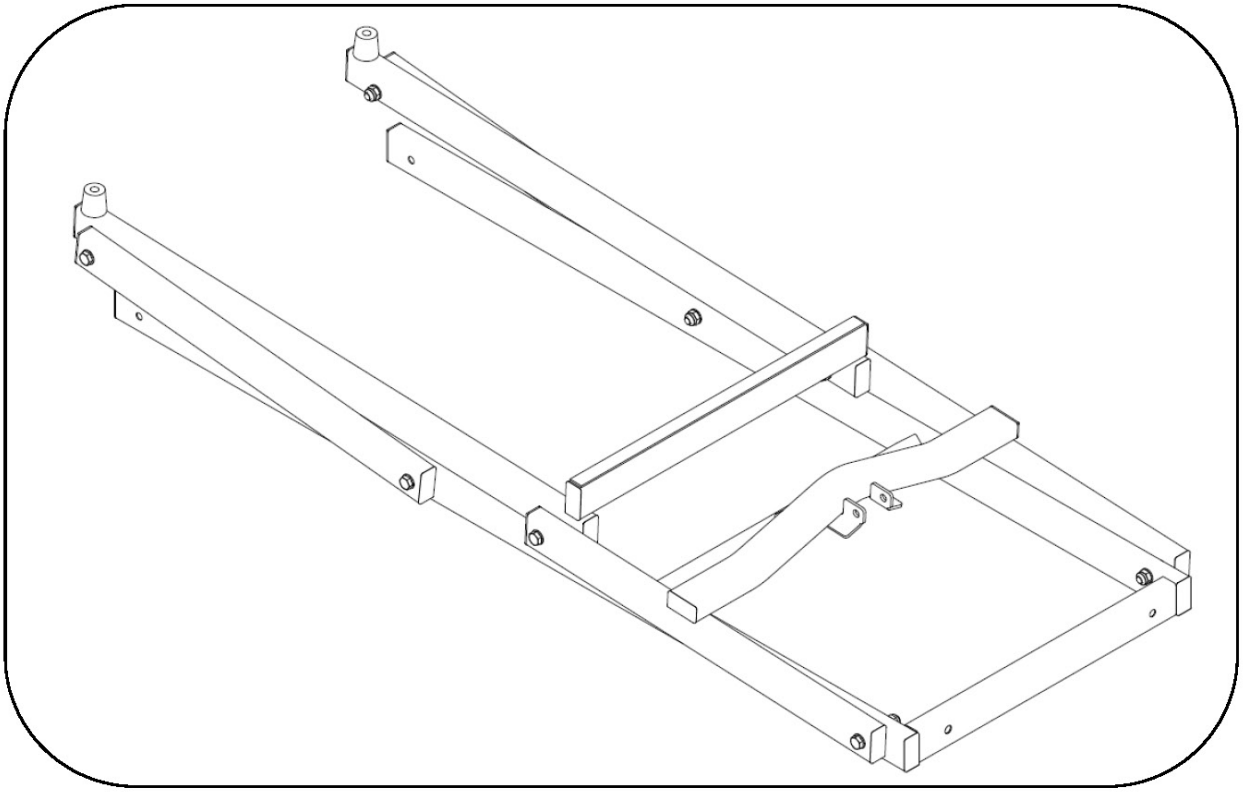

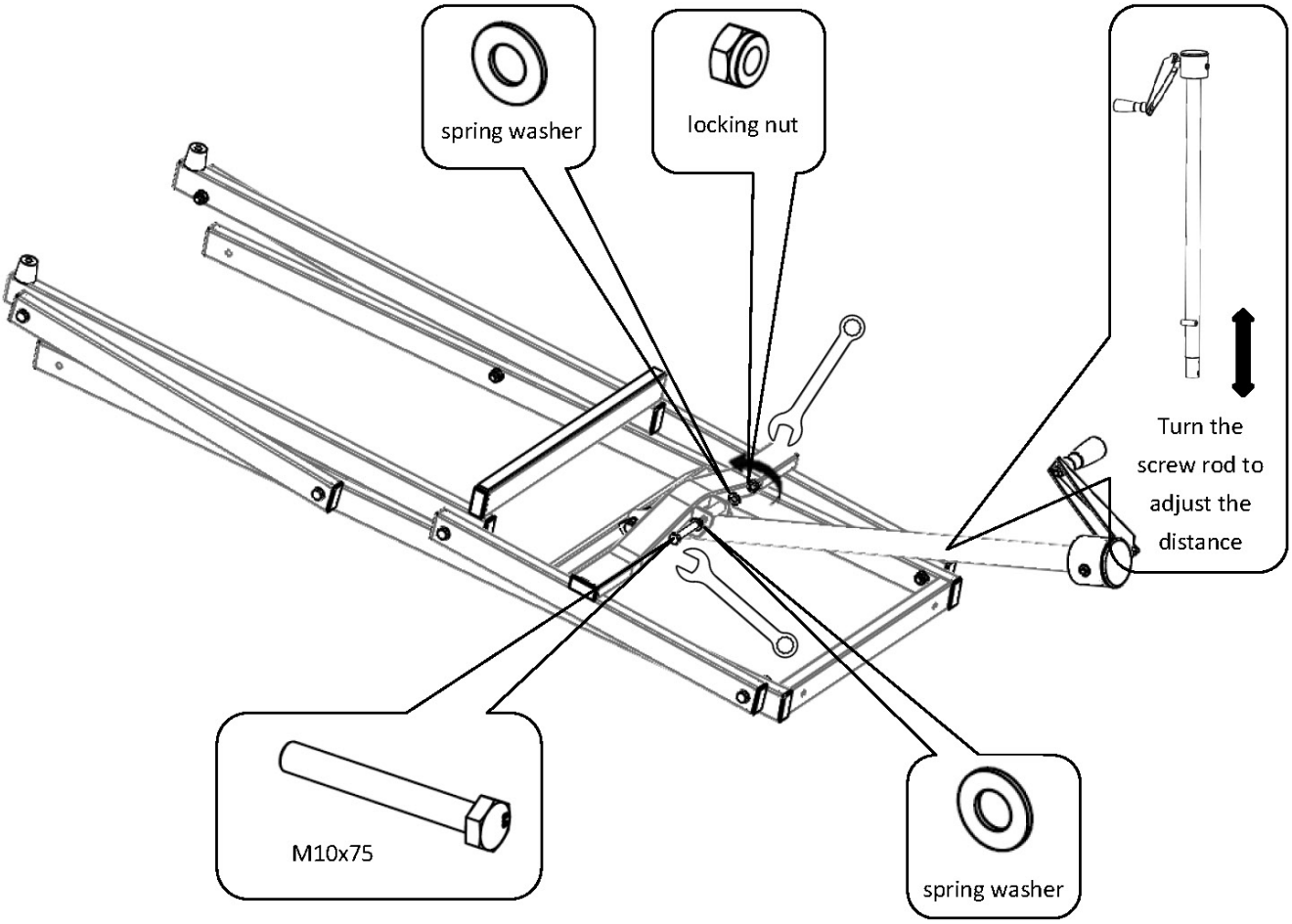
spring washer
locking nut
Turn the screw rod to adjust the distance
M10x75
spring washer

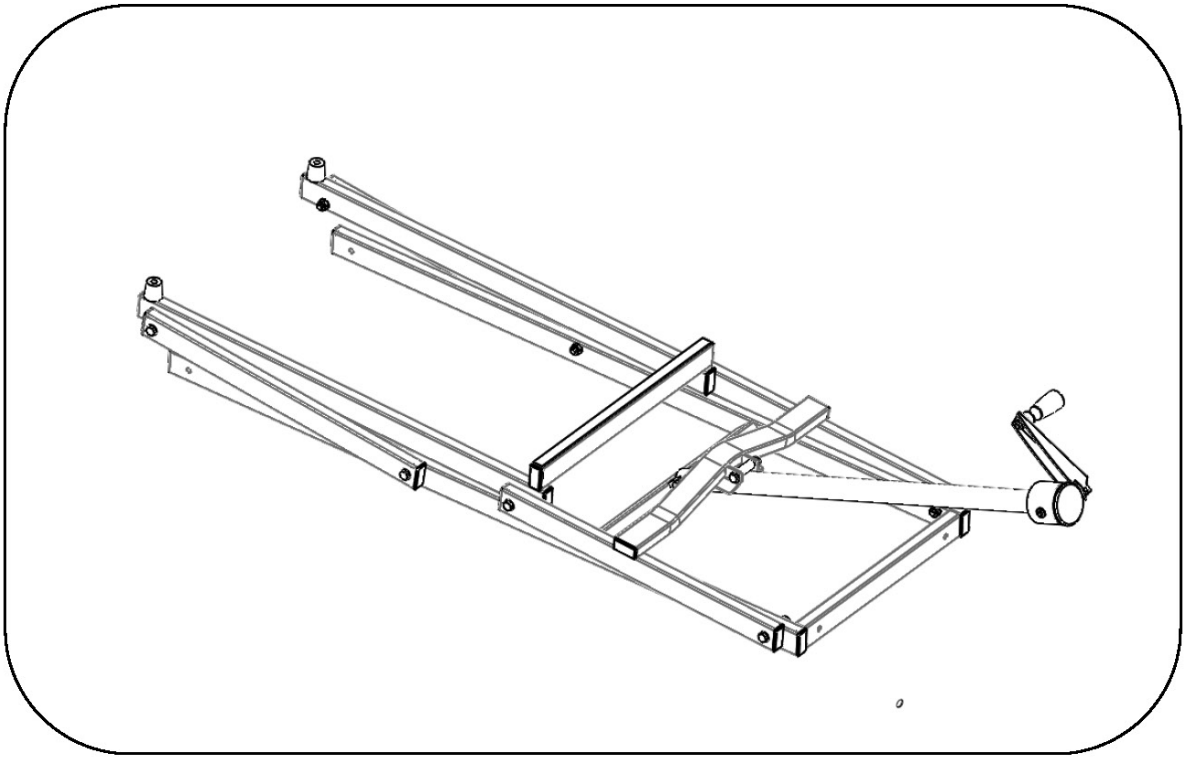

PRODUCT WARRANTY & LIABILITY

GENERAL PRODUCT WARRANTY: Products purchased from the Authorized Dealer (original place of purchase) or Merchant ("Dealer") will be free of defects in material and workmanship at the time of receipt, and will meet the specifications stated at the place of purchase transaction or online at the Dealer's website, under normal use and service when correctly installed, operated and maintained. This product warranty is effective for the period of time stated below, unless otherwise stated in the product instructions or depicted in the product advertisement. All Authorized Dealer warranties are NON-TRANSFERABLE and cover only the original end purchaser. This limited warranty does not cover products purchased through non-authorized dealers. Non-authorized dealer receipts are not accepted for warranty verification.

*****WARRANTY CLAIMS MUST BE MADE DIRECTLY TO THE ORIGINAL PLACE OF PURCHASE.*****

WARRANTY PERIOD: This warranty remains in force for one year from the date of the product's accepted delivery. The Authorized Dealer offers a one year manufacturer's warranty for most products unless otherwise specified on the product advertisement.

WARRANTY SERVICE: The Authorized Dealer will replace any defective or malfunctioning part at no charge, including payment of the shipping costs of parts or replacement product to and from the manufacturer. The purchaser is responsible for labor charges. If the product does not meet specifications as depicted in the advertisement, the Authorized Dealer will refund the full purchase price of the product.
Questions regarding the warranty on a specific product and warranty claims should be directed to the Authorized Dealer with whom the purchase transaction was made.

WARRANTY LIMITATIONS: The above warranty does not apply to products that are repaired, modified or altered by any party other than the Authorized Dealer; are subjected to unusual physical stress or conditions (such as overloaded ramps or corrosion), natural disaster, governmental actions, wars, strikes, labor disputes, riots, theft, vandalism, terrorism or any reason beyond reasonable control; are damaged due to improper installation, misuse, abuse, accident or negligence in use, storage, transportation or handling, or tampering; or to products that are considered consumable items or items requiring repair or replacement due to normal wear and tear.
Product should be inspected prior to signing for delivery. Product damage incurred during shipping, unless noted on the Bill of Lading at the time of delivery, renders this warranty void.

LIMITED LIABILITY: In no event shall **THE AUTHORIZED DEALER** be liable to the purchaser or any third party for any indirect, incidental, consequential, special, exemplary or punitive damages arising out of the use of the product, including, without limitation, property damage, loss of value of the product or any third party products that are used in or with the product, or loss of use of the product or any third party products that are used in or with the product.