DAPPER

User Manual

Dapper Commercial Portable Hot Water Carpet & Upholstery Spot Extractor

Model: DP-UCE1231

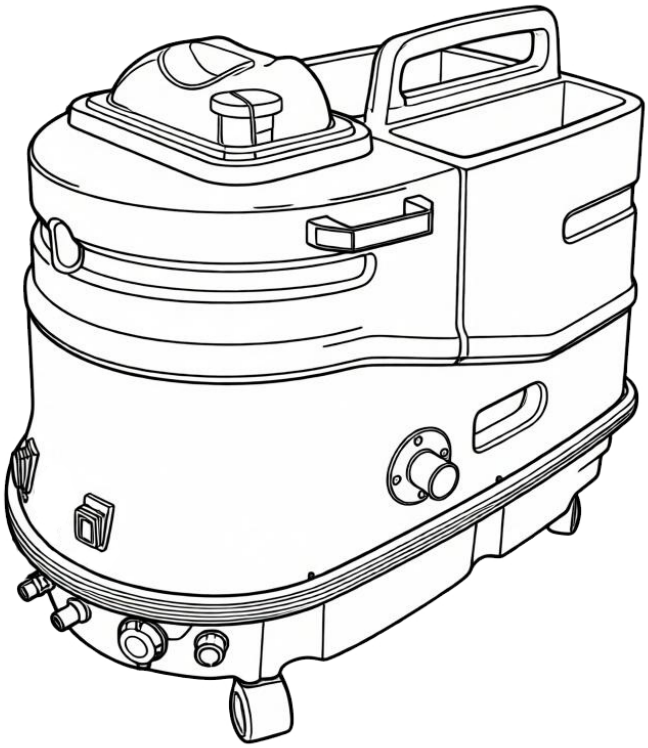

For any service-related issues,

Please contact us: Phone Number: 718-301-8243

Email address: support@dapper-supply.com

Contents

Introduction 4
Safety 5
Technical Specifications 6
Parts & Components 7
Operating Steps 9
Maintenance & Descaling 11
Warranty 14

Introduction

The Commercial Portable Hot Water Carpet & Upholstery Spot Extractor is a professional-grade multi-function cleaning machine designed to handle deep cleaning and drying of leather and fabric sofas, curtains, seats, mattresses, carpets, wire-wall surfaces, and more.

Key Features

- 6 core cleaning functions: cold-water spraying, brushing, steaming, hot-water spraying, vacuuming, and drying
- Dual-grade 1,000W vacuum motor with wastewater recovery rate ≥ 85% and noise level ≤ 78 dBA
- Open dual clean water tanks for easy refilling; accessories can be stored internally
- Efficient closed-loop process: foam brushing, spray extraction, filtration, high-temperature steaming, wastewater recovery
- One-touch switch between vacuum and blow-drying for rapid drying of heavily soiled areas, preventing moisture return
- Full coverage for hotels, cinemas, vehicles, offices, restaurants, spas, billiard rooms, and internet cafes — deep cleaning of sofas, mattresses, carpets, curtains, upholstered walls, and other high-use surfaces

Safety

WARNING: Read this manual completely before operating the machine. Improper use may result in damage or injury not covered under warranty.

Pre-Use Preparation: Read the manual thoroughly before operation to ensure correct usage.

Moving the Machine: Never move the machine by pulling the suction hose or power cord during operation.

Wastewater Disposal: When the recovery tank is full, empty it before resuming work.

Storage: For long-term storage, place the machine in a dry, indoor environment.

Parts Maintenance: Do not disassemble or replace parts without authorization. Unauthorized repairs are not covered under warranty.

Steam Function: This machine heats instantly when plugged in. To prevent dry firing, always ensure steam is being emitted during use. If steam stops, immediately turn off the steam switch, add sufficient water, wait 5 minutes to cool, then restart.

IMPORTANT: Descaling: Descale the machine every 10 uses or once per month. See Chapter 6 for the full descaling procedure.

Technical Specifications

Voltage	110–125V / 50 Hz
Vacuum Motor	1,000W
Spray Motor	25W × 2
Steam Motor	1,400W
Steam Pump	25W
Air Pump	30W
Bubble Power	40W DC 24V
Chemical Tank Capacity	1.06 gal (4 L)
Solution Tank Capacity	2.11 gal (8 L)
Recovery Tank Capacity	2.64 gal (10 L)
Suction Hose Length	13.1 ft (4 m)
Power Cord Length	26.2 ft (8 m)
Net / Gross Weight	59.5 / 66.1 lb (27 / 30 kg)
Machine Dimensions	27.2 × 17.3 × 25.2 in (69 × 44 × 64 cm)

Parts & Components

All labeled components are referenced throughout this manual. Use the exploded diagram to identify each part on the machine.

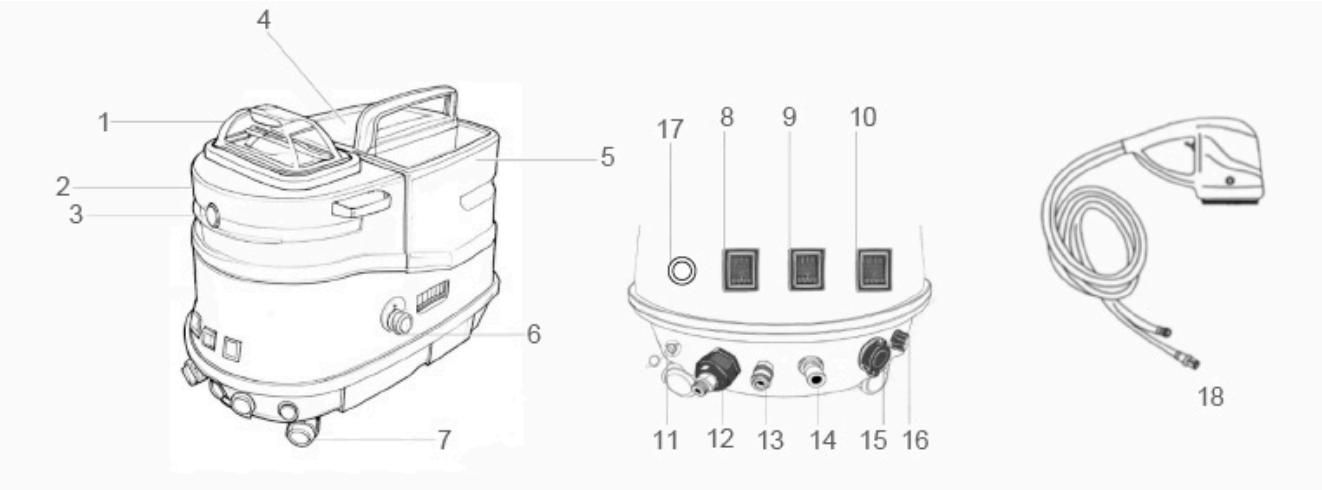

Machine Components

Ref #	Component Name
01	Sewage Cover
02	Recovery Tank
03	Bunghole (Fill Port)
04	Water Tank
05	Chemical Tank
06	Air Outlet
07	Wheel
08	Spray Switch
09	Vacuum Switch
10	Power Indicator Light
11	STEAM Aviation Plug
12	Steam Pipe Connector
13	Spray Connector
14	Bubble Connector
15	FOAM Aviation Plug
16	Bubble Adjustment Knob
17	Steam Indicator Light
18	Hand Brush

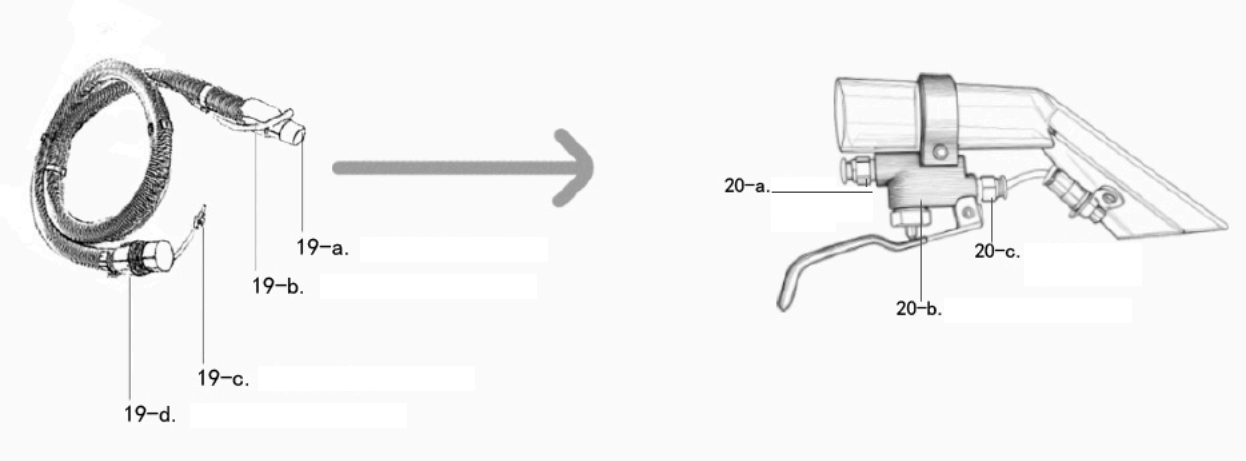

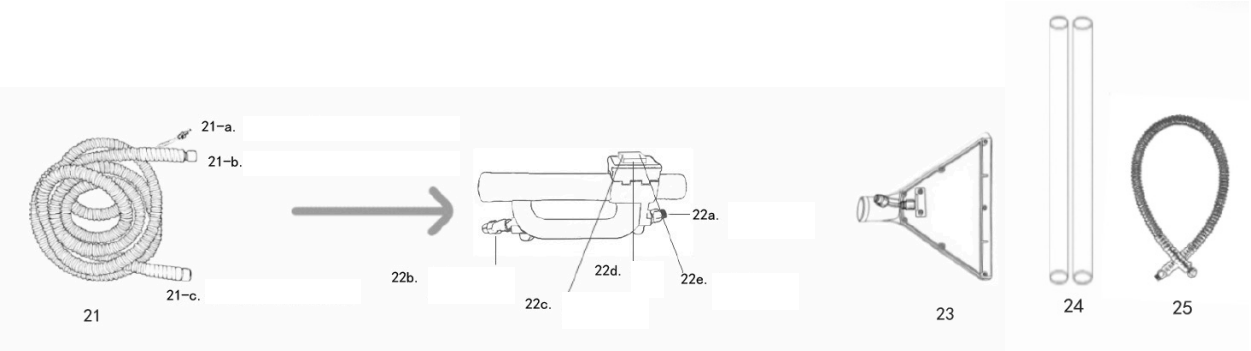

Accessories & Hose Set

Ref #	Accessory / Part Name
19	Suction Hose Set
19-a	Hose Connector
19-b	Transparent Cube
19-c	Connector
19-d	Buddy Connector
20	Sofa Nozzle — cold water only
20-a	Inlet Connector (Water Spray Valve)
20-b	Water Valve
20-c	Outlet Connector
21	Steam Hose
21-a	Steam Cable
21-b	M Quick-Disconnect
21-c	F Quick-Disconnect
22	Control Handle (Steam & Hot Water)
22a	Outlet Connector
22b	Inlet Connector
22c	HOT WATER Switch (rear)
22d	OFF Position
22e	STEAM Switch
23	Curtain Nozzle — steam & hot water
24	Straight Extension Tube
25	Extention pipe

Operating Steps

Follow these steps in order each time you use the machine. Ensure all switches are OFF before beginning setup.

Cold Water / Foam Brush Setup

1. Add the appropriate amount of defoamer into the recovery tank (02).
2. Add the appropriate amount of detergent into the chemical tank (05) and clean water into the water tank (04).
3. Connect the hand brush (18) to the bubble connector (14) and the FOAM aviation plug (15).
4. Connect the buddy connector (19-d) to the bunghole (03).
5. Connect the connector (19-c) from the suction hose set to the spray connector (13) on the machine.
6. Connect the transparent cube (19-b) to the inlet connector of the water spray valve (20-a).
7. Connect the sofa nozzle (20) to the hose connector (19-a).
8. For simultaneous cold-water spraying and suction, turn on spray switch (08) and vacuum switch (09) at the same time.

Steam & Hot Water Setup

1. Screw the steam hose (21) with the M quick-disconnect (21-b) onto the main unit connectors (11) and (12).
2. Connect the control handle inlet (22b) to the steam hose (21c).
3. Connect the curtain nozzle (23) to the control handle outlet (22a). If needed, install the straight extension tube (24) between the control handle (22) and the curtain nozzle (23) for extra reach.

The control handle (22) features a 3-position switch:
22e — STEAM: Steam output mode.
22d — OFF: Machine off.
22c — HOT WATER (rear): Hot water spray mode.

For simultaneous steaming and suction, turn on steam switch (22e) and vacuum switch (10) at the same time.

NOTE: Steam Indicator: When the Steam Switch (22e) is activated, a flashing red light on the steam indicator (17) means the unit is heating up. Wait approximately 15 seconds for steam output. If the light fails to illuminate or flash, steam operation has stopped — turn off power immediately.

Operating the Hand Brush

Plug in the power cord, turn on the main power, and control the 3-position switch on the hand brush (18):
FOAM: Both brush rotation and foam bubbling are active.
OFFAM: Machine stops (off position).
BRUSH: Brush rotation only; no foam bubbling.
Use the bubble adjustment knob (16) to control foam moisture. Turning it clockwise produces wetter foam.
After washing, turn on the red vacuum switch (09) to recover dirty foam.

TIP: After cleaning an area of approximately 5.4 sq ft (0.5 m^2) on a sofa, immediately rinse and vacuum the surface with clean water to prevent detergent residue buildup.

Shutdown & Cleanup

- After cleaning, turn off all switches and drain residual cleaner and water from the tanks.
- If residue remains at the bottom of a tank, use the suction hose set (19) to siphon the excess solution into the recovery tank (02).
- Drain the wastewater from the recovery tank, or remove the tank bottom cover for drainage.
- Clean the spray suction hose and hand brush tubing promptly after each use to prevent odors and buildup.

Maintenance & Descaling

Routine Cleaning (After Every Use)

1. Rinse the suction hose, spray hose, and hand brush tubing with clean water.
2. Empty and rinse the recovery tank and chemical tank.
3. Wipe down the exterior with a damp cloth. Do not use harsh solvents.

Monthly Descaling Procedure

REQUIRED: Descale the machine every 10 uses or once per month to prevent mineral scale buildup in the steam system, which can reduce performance and damage internal components.

1. Mix 2.8 oz (80 g) of descaling powder or citric acid with 2.11 gal (8 L) of water at a 1:10 ratio. Add this solution to the water tank (04).
2. Turn on the Steam Switch (22e) and hold the curtain nozzle (22) above the water tank (04).
3. Run the descaling cycle for 15 minutes.
4. After descaling, flush the system with clean water before resuming normal operation.

Long-Term Storage

1. Drain all tanks completely before storing.
2. Store in a dry, indoor environment away from direct sunlight and freezing temperatures.
3. Coil and store hoses loosely to avoid kinking.

WARNING: Do not disassemble or replace internal parts without authorization. Unauthorized repairs void the warranty.

Warranty

Limited Warranty

Dapper Supply, Inc. extends a limited warranty to the original purchaser, guaranteeing that this Dapper Supply product is free from manufacturing defects in material or workmanship for one year from the date of purchase. If a defect is discovered within the warranty period, Dapper Supply, Inc. reserves the right to repair or replace the product at no cost to you, or to cover the cost of replacement parts and repair labor necessary to address defects present at the time of purchase or resulting from normal usage, provided the product has been installed, operated, and maintained according to the provided instructions. Any replacement parts requested within the first year are free of charge and fall under this warranty.
At its sole discretion, Dapper Supply, Inc. may choose to replace the product. In such cases, the replacement product will carry the warranty for the remainder of the original unit's warranty period.
This warranty is valid exclusively for the original purchaser of the product and applies only within the United States. The warranty begins on the date of the original purchase. Proof of the purchase date is required to obtain service under this warranty.
Under this limited warranty, your sole and exclusive remedy is the repair of the product as described above. All warranty services must be performed by a Dapper Supply-authorized service provider.
To claim warranty or request repair service:
Email: support@dapper-supply.com
Include your name, address, phone number, details of the warranty repair request, and a copy of your proof of purchase receipt. Alternatively, visit dapper-supply.com and use the "Contact Us" page. A Dapper Supply customer service representative will assist in arranging service for your product.
Thank you for choosing Dapper Supply.

WARRANTY EXCLUSIONS

This limited warranty does not cover:
1.Product failure due to power outages, interruptions, or inadequate electrical service.
2.Damage incurred during transportation or handling.
3.Damage caused by accidents, pests, lightning, wind, fire, floods, or other acts of God.
4.Damage resulting from accidents, misuse, abuse, improper installation, repair, or maintenance, including the use of devices that alter or convert the voltage or frequency of electricity.
5.Unauthorized product modifications, repairs performed by unauthorized providers, or useof non-approved replacement parts.
6.Cleaning and maintenance not performed according to the user manual.
7.Use of incompatible accessories or components.
8.Any costs associated with repairs or replacements under these excluded circumstances will be the responsibility of the consumer.

DAPPER