DAPPER

User Manual

1 Gal Backpack Vacuum Cleaner

Model: DP-CVC1141

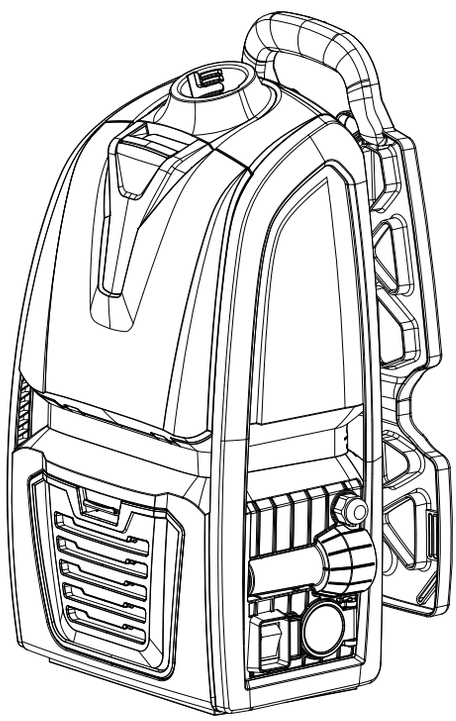

For any service-related issues,
Please contact us: Phone Number: 718-301-8243
Email address: support@dapper-supply.com

Contents

SAFETY 4

PARTS IDENTIFICATION 6

OPERATION 7

MAINTENANCE 15

WARRANTY 16

SAFETY

Read all instructions before using this vacuum cleaner.
Failure to follow these warnings may result in injury, fire, or damage to the appliance.
Do not leave the vacuum cleaner unattended when it is plugged in.
Unplug from the electrical outlet when not in use and before removing filters.

1. Do not immerse the vacuum cleaner in water or any other liquids.

2. Do not pick up building materials such as plaster dust, wood shavings, sand, or similar debris.

3. Use only as described in this manual.
   Use only the manufacturer's recommended attachments.

4. Do not use the vacuum cleaner if the cord or plug is damaged, or if the appliance has been dropped, damaged, left outdoors, or dropped into water.
   Return the appliance to an authorized service center for examination, repair, or adjustment.

5. Do not pull or carry the vacuum cleaner by the power cord.
   Do not use the cord as a handle, close doors on the cord, or pull the cord around sharp edges or corners.
   Do not run the vacuum cleaner over the cord.
   Keep the cord away from heated surfaces.

6. Do not unplug by pulling on the cord.
   To unplug, grasp the plug—not the cord.

7. Do not handle the plug or vacuum cleaner with wet hands.

8. Do not use the vacuum cleaner to pick up large objects or objects that may damage the appliance.

9. Keep hair, loose clothing, fingers, feet, and all body parts away from openings, the rotating agitator, and other moving parts.
   Do not operate the vacuum cleaner barefoot or while wearing open-toe shoes.

10. Do not pick up hot, smoking, or burning objects, such as hot coals, cigarette butts, or matches.

11. Do not pick up hard or sharp objects, such as glass, nails, screws, or coins.

12. Do not operate the vacuum cleaner without all filters in place.
    Use only filters and accessories provided or approved by the manufacturer.
    Failure to do so will void the warranty.

13. Turn off all controls before plugging in or unplugging the vacuum cleaner from the electrical outlet.

14. Use extra caution when cleaning on stairs.

15. Do not pick up flammable or combustible materials, or use the vacuum cleaner in areas where such materials may be present.

16. Do not pick up toxic materials, such as chlorine bleach, ammonia, drain cleaner, or similar substances.

17. Do not use the vacuum cleaner in enclosed spaces that contain vapors given off by oil-based paints, paint thinners, mothproofing substances, flammable dust, or other explosive or toxic vapors.

18. Use only on dry, indoor surfaces.

19. Do not insert any objects into openings.
    Do not use the vacuum cleaner with any opening blocked.
    Keep openings free of dust, lint, hair, and anything else that may reduce airflow.

20. Always store the appliance indoors in a cool, dry area.

21. Keep your work area well lit.

22. Keep the end of the hose, wands, and other openings away from your face and body.

23. This appliance is not intended for use by persons (including children) with reduced physical, sensory, or mental capabilities, or by persons lacking experience or knowledge, unless they have been given supervision or instruction concerning use of the appliance by a person responsible for their safety.

    Children should be supervised to ensure that they do not play with the appliance.

PARTS IDENTIFICATION

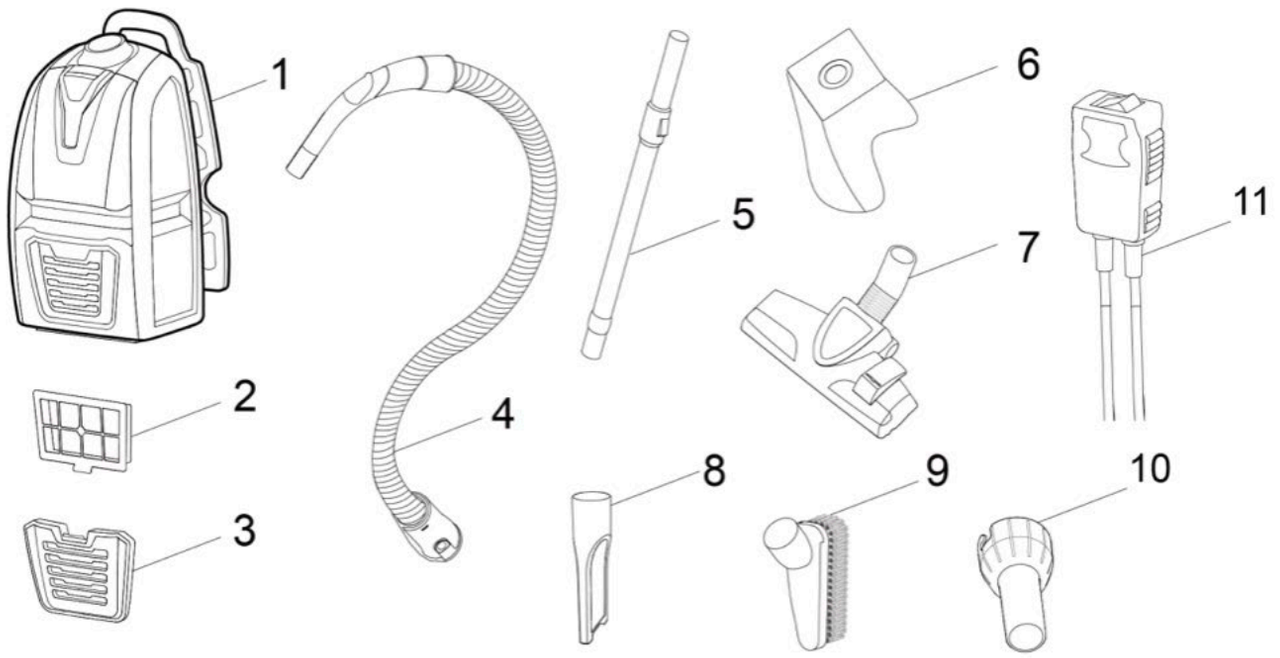

1. Main Unit (Backpack Vacuum Body)
The main vacuum housing worn on the user's back.

2. Exhaust Filter
Rectangular filter element shown detached.

3. Exhaust Grille
Protective vent cover that installs over the exhaust filter.

4. Flexible Hose
Corrugated hose with threaded connection end.

5. Metal Tube (Extension Wand / Telescopic Tube)
Straight rigid tube that connects the hose to floor tools or attachments.

6. Waist Belt
Padded waist belt used to secure the unit around the user's waist.

7. Combination Floor Tool (Floor-to-Carpet Brush)
Primary floor head with height selector.

8. Crevice Tool
Narrow nozzle for tight spaces and edges.

9. Dusting Brush
Small bristle brush for furniture and delicate surfaces.

10. Blower Attachment / Inflator Nozzle
Rounded cone-style blower tip.

11. Power Cord with In-Line On/Off Switch
Electrical power cord assembly including the switch.

OPERATION

WARNING

To reduce the risk of electric shock, disconnect the power cord from the electrical outlet before removing or replacing the dust bag, cloth bag, or filters, and before performing maintenance or troubleshooting.

ASSEMBLING YOUR VACUUM

Note: Always unplug the vacuum cleaner from the wall outlet before assembling or removing accessories.

INSERTING THE HEPA DUST BAG

Note: This unit may be used with the Shake-Out Bag alone; however, it must be cleaned after each use if no paper dust bag is installed.
Important: Do not operate the vacuum cleaner without all filters and the dust bag properly installed. Operating the unit without a dust bag or filters may cause damage.
Unplug the vacuum cleaner and disconnect the flexible hose from the hose inlet.

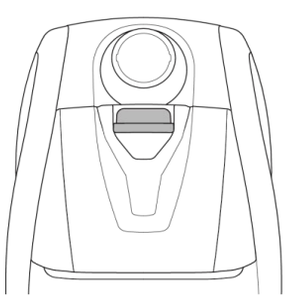

Fig 1

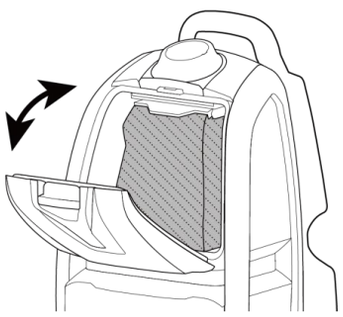

Fig 2

To open the canister lid, press the canister lid tabs on both sides of the unit and lift the lid. (Fig. 1)
Pull the tab on the dust bag holder outward slightly and flip it upward. (Fig. 2)

Hold the dust bag and slide it firmly into the slots in the bag holder. (Fig. 2)

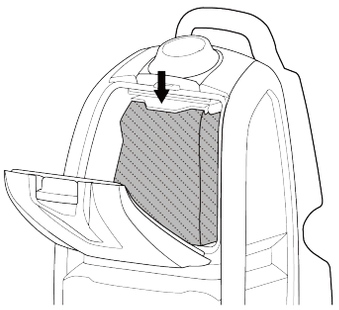

Fig 3

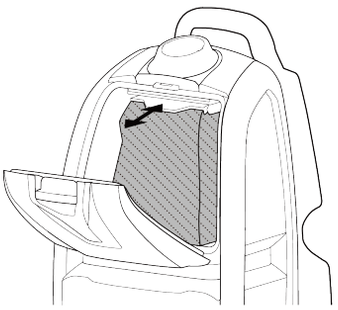

Fig 4

Ensure the cardboard face of the new dust bag rests securely in the dust bag cover guides. (Fig. 3)

Confirm that the Shake-Out Bag is properly positioned. (Fig. 4)

Flip the HEPA bag holder down and press the tab until it clicks into place. Then reinstall the canister lid.

The canister lid may be reinstalled with the hose opening on either the right or left side, according to user preference. (Fig. 5)

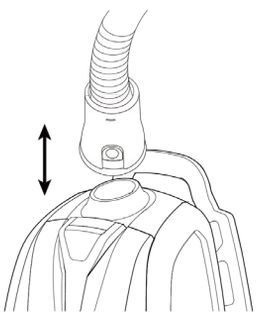

Fig 5

ATTACHING THE FLEXIBLE HOSE TO THE VACUUM

The flexible hose must be connected to the vacuum before strapping the unit onto the user.
To attach the flexible hose, insert the threaded end of the hose into the hose inlet and turn it counterclockwise until it locks securely into place. (Fig. 6)

Plug the power cord into a properly grounded electrical outlet.

To remove the flexible hose, unplug the power cord and rotate the hose to release it from the hose inlet.

To remove the telescopic tube from the flexible hose, press the telescopic tube release button and pull the tube out. (Fig. 7)

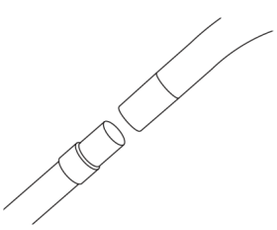

Fig 6

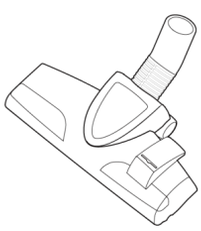

Fig 7

Step on the Floor-to-Carpet selector to adjust the brush height.
Two height settings are available: one for hard floors and one for carpets. (Fig. 8)

To remove the telescopic tube from the Floor-to-Carpet brush, pull the telescopic tube straight out of the brush head.



Fig 8

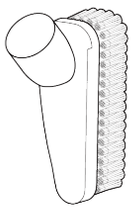

Fig 9



Fig 10

USING THE ATTACHMENTS

Dusting Brush

Use the dusting brush for cleaning furniture and delicate surfaces. (Fig. 9)

Crevice Tool

Use the crevice tool for cleaning radiators, crevices, corners, baseboards, and between cushions. (Fig. 10)

Pet Hair Remove Brush

The Pet Hair Remove Brush is designed for cleaning upholstery.
Its unique surface makes it effective for removing unwanted pet hair. (Fig. 11)
Note: This tool is not a grooming device and must not be used on animals.
Caution:
Do not use the Pet Hair Remove Brush on delicate or woven fabrics that may snag.
Do not use the Pet Hair Remove Brush on wooden floors.

Blower Attachments

The blower attachments may be used with the vacuum cleaner to remove fine dirt particles from tight crevices or small areas, or to inflate items such as air mattresses. (Fig. 12)

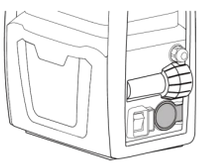

Fig 11

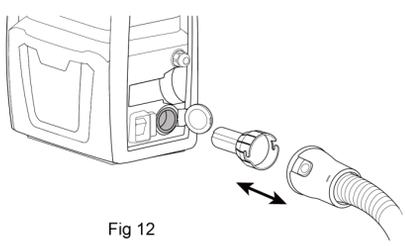

Fig 12

MANUAL SUCTION CONTROL

Your vacuum cleaner is equipped with a manual variable suction control located on the flexible hose handle.
Suction power can be adjusted by sliding the suction regulator between the open and closed positions. (Fig. 13)

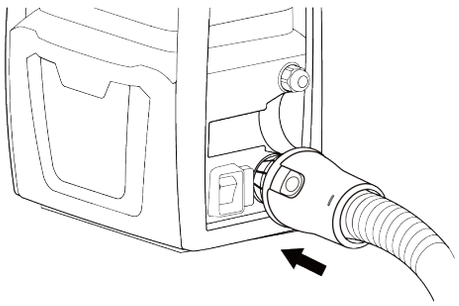

Fig 13

Open: Reduced suction

Closed: Maximum suction

For example, lower suction is recommended for upholstery and draperies, while thicker carpets require maximum suction.

USING THE AIR-DRIVEN TURBO BRUSH

WARNING
To reduce the risk of electric shock, disconnect the power cord from the electrical outlet before removing the dust bag, Shake-Out Bag, HEPA pre-motor filter, changing filters, or performing maintenance or troubleshooting.
The performance of the Air-Driven Turbo Brush depends on the brush rotating at high speed. Strong airflow is required for optimal operation. To maintain maximum suction, follow these instructions: Replace the dust bag or empty the Shake-Out Bag frequently.

Replace the pre-motor and exhaust filters as needed.

Ensure the rotating brush is kept free of hair, string, or debris that may accumulate and reduce performance.

To attach the Air-Driven Turbo Brush, insert the telescopic tube into the brush inlet.

Adjust suction as desired using the suction control on the Air-Driven Turbo Brush.

Note:
The Air-Driven Turbo Brush features a suction control slider located on the top of the brush.
Open or close the slider to increase or decrease suction as needed (open for high-pile carpets, closed for low-pile carpets).

USING THE BLOWER ATTACHMENTS

Blower attachments are especially useful for cleaning hard-to-reach areas and small compartments, such as those found in vehicles.

Important Note:
When blocking the air holes, hold the blower attachment firmly to prevent it from blowing off.
Note:
Do not use the blower function to clear dust from fragile or delicate objects unless they are secure-

ly supported or firmly held in place. The blower action is powerful and may cause damage.

USING THE BLOWER ATTACHMENTS

The blower attachments include air bleed holes that help relieve excess air pressure to prevent the attachment from blowing off.
If increased air pressure is desired, partially or fully cover one or more of the air bleed holes.

To Use the Blower Attachments

Pull up and hold the exhaust tab. With your free hand, remove the exhaust grille. (Fig. 13)

Remove the exhaust filter.

To install the blower port into the exhaust outlet, align the lower tabs on the blower port with the slots in the exhaust outlet.
Pull up on the exhaust tab and press the blower port inward until it snaps securely into place. (Fig. 14)

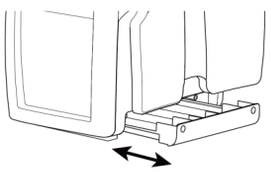

Fig 14

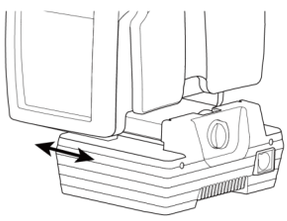

Fig 15

To attach the flexible hose to the blower port, align the hose and turn it counterclockwise until it stops.
The hose is now securely locked in place. (Fig. 15)

To inflate items, select the blower attachment size that best fits the air valve.

Turn the unit ON and hold the blower attachment firmly against the air valve while air is being delivered into the inflatable.

To remove the flexible hose, turn it clockwise and pull it straight out from the blower port.

Note:
When blowing dirt or debris from objects, hold the flexible hose firmly by the attachment to prevent it from detaching.
The blower attachments are useful for cleaning hard-to-reach crevices and small compartments, such as those found in vehicles.
Important Note:
When blocking the air bleed holes, hold the blower attachment firmly to prevent it from blowing off.
Note:
Do not use the blower function to clear dust from fragile or delicate objects unless they are securely supported or firmly held in place. The blower action is strong and may cause damage.
The blower attachments are equipped with air bleed holes that help relieve excess air pressure and prevent the attachment from detaching.
If increased air pressure is required, partially or fully cover one or more of the air bleed holes.

To Use the Blower Attachments

Pull up and hold the exhaust tab. With your free hand, remove the exhaust grille. (Fig. 13)

Remove the exhaust filter.

To install the blower port into the exhaust outlet, align the lower tabs on the blower port with the slots in the exhaust outlet.
Pull up on the exhaust tab and push the blower port inward until it snaps securely into place. (Fig. 14)

OPERATION INSTRUCTIONS

To attach the flexible hose to the blower port, align the hose and turn it counterclockwise until it stops.
The hose is now securely locked in place. (Fig. 15)

To inflate items, select the blower attachment that best fits the air valve.

Turn the unit ON and hold the blower attachment firmly against the air valve while air is being delivered into the inflatable.

To detach the flexible hose, turn it clockwise and pull it straight out from the blower port.

Note:
When blowing dirt or debris from objects, hold the flexible hose firmly by the attachment to prevent it from detaching.

USING YOUR VACUUM

Plug the power cord into a properly grounded wall outlet.

Connect the flexible hose and telescopic tube, if required.

Position the shoulder straps comfortably on each shoulder and secure the waist belt using the hook-and-loop fasteners. (Fig. 16)

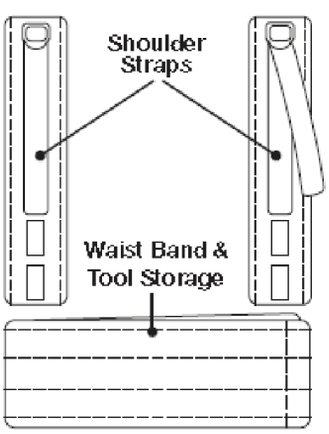

Fig 16

Caution:
If the waist belt and both shoulder straps are not properly and securely fastened, the unit may fall

from your back, causing injury or damage.
Turn the vacuum cleaner ON by pressing the power switch located near the base of the unit. (Fig. 17)

REMOVING AND REPLACING THE HEPA DUST BAG

Important:
Do not operate the vacuum cleaner without all filters and the Shake-Out Bag properly installed, or without a dust bag in place.

To Remove the Dust Bag

To open the canister, press the canister lid tabs on both sides of the unit and lift the canister lid. (Fig. 18)

Pull the tab on the dust bag holder outward slightly and lift it upward. (Fig. 18)

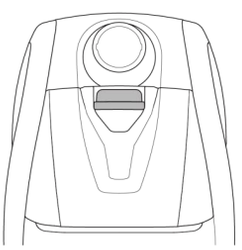

Fig 17

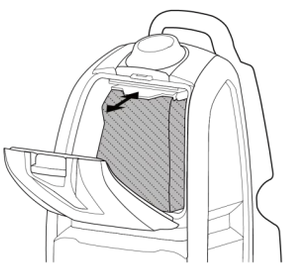

Fig 18

Holding the dust bag carefully, slide it out of the slots in the bag holder.
Take care to prevent dust from spilling out of the bag. (Fig. 19)

To Install a New Dust Bag

Replace the dust bag with a new bag only. Do not reuse the same dust bag.

Ensure the cardboard face of the new dust bag rests securely in the dust bag cover guides.

Reinstall the Shake-Out Bag into the vacuum.

Flip the dust bag holder back into position and press the tab until it clicks securely into place.

Replace the canister lid onto the vacuum.

Warning:
Never overfill the dust bag. Replace the dust bag when it is full, and clean the Shake-Out Bag and filters each time the dust bag is replaced.

CLEANING & REPLACING THE SHAKE-OUT BAG

Note:
Clean the Shake-Out Bag outdoors when changing the dust bag.
For optimal performance, use the dust bag together with the Shake-Out Bag. Using both reduces the frequency of washing the Shake-Out Bag.

CLEANING THE SHAKE-OUT BAG WHEN USED WITH A DUST BAG

Remove the Shake-Out Bag from the vacuum.

Holding the handle at the bottom of the bag, shake it vigorously outdoors over a garbage receptacle until no dust remains.

MAINTENANCE

Inspecting the Shake-Out Bag

Inspect the Shake-Out Bag regularly for signs of wear, tears, or damage.
Replace the Shake-Out Bag immediately if any damage or tearing is observed.

CLEANING THE SHAKE-OUT BAG (WHEN USED ALONE)

Remove the Shake-Out Bag from the vacuum.
Empty contents into a trash container and shake the bag vigorously outdoors until no dust remains.

The Shake-Out Bag is hand-washable using lukewarm water.

Allow the Shake-Out Bag to air dry completely for at least 24 hours.
Never reinstall the Shake-Out Bag while it is wet.

If the Shake-Out Bag is used frequently without a dust bag, more frequent cleaning and replacement may be required.

Once completely dry, reinstall the clean Shake-Out Bag into the unit and replace the canister lid.

CLEANING THE HEPA PRE-MOTOR FILTER

Important:
The HEPA Pre-Motor Filter captures fine dust particles and airborne allergens before air is exhausted from the vacuum. Due to its high filtration efficiency, this filter will accumulate fine dust that may not be visible. Regular cleaning is necessary to maintain proper suction and performance.
Clean the HEPA Pre-Motor Filter after each use or whenever suction appears reduced.

To Clean the HEPA Pre-Motor Filter

Remove the Shake-Out Bag from the canister.
The HEPA Pre-Motor Filter is located beneath the Shake-Out Bag.
To remove the filter, lift it upward from the sides.

Gently tap the HEPA Pre-Motor Filter against a hard surface to remove loose dust and debris.

If necessary, rinse the HEPA Pre-Motor Filter under running water, allowing water to flow through the dirty side of the filter.
Perform this cleaning at least once per month or whenever suction decreases.

WARNING
Wash the HEPA Pre-Motor Filter once per month or whenever suction appears reduced.

Allow the filter to air dry for a minimum of 24 hours before reinstalling it into the vacuum.

Do not reinstall a wet filter.

Warranty

Limited Warranty

Dapper Supply, Inc. extends a limited warranty to the original purchaser, guaranteeing that this Dapper Supply product is free from manufacturing defects in material or workmanship for one year from the date of purchase. If a defect is discovered within the warranty period, Dapper Supply, Inc. reserves the right to repair or replace the product at no cost to you, or to cover the cost of replacement parts and repair labor necessary to address defects present at the time of purchase or resulting from normal usage, provided the product has been installed, operated, and maintained according to the provided instructions. Any replacement parts requested within the first year are free of charge and fall under this warranty.

At its sole discretion, Dapper Supply, Inc. may choose to replace the product. In such cases, the replacement product will carry the warranty for the remainder of the original unit's warranty period. This warranty is valid exclusively for the original purchaser of the product and applies only within the United States. The warranty begins on the date of the original purchase. Proof of the purchase date is required to obtain service under this warranty.

Under this limited warranty, your sole and exclusive remedy is the repair of the product as described above. All warranty services must be performed by a Dapper Supply-authorized service provider.

To claim warranty or request repair service:

Email: support@dapper-supply.com

Include your name, address, phone number, details of the warranty repair request, and a copy of your proof of purchase receipt. Alternatively, visit dapper-supply.com and use the "Contact Us" page. A Dapper Supply customer service representative will assist in arranging service for your product.

Thank you for choosing Dapper Supply.

WARRANTY EXCLUSIONS

This limited warranty does not cover:

1.Product failure due to power outages, interruptions, or inadequate electrical service.

2.Damage incurred during transportation or handling.

3.Damage caused by accidents, pests, lightning, wind, fire, floods, or other acts of God.

4.Damage resulting from accidents, misuse, abuse, improper installation, repair, or maintenance, including the use of devices that alter or convert the voltage or frequency of electricity.

5.Unauthorized product modifications, repairs performed by unauthorized providers, or useof non-approved replacement parts.

6.Cleaning and maintenance not performed according to the user manual.

7.Use of incompatible accessories or components.

8.Any costs associated with repairs or replacements under these excluded circumstanceswill be the responsibility of the consumer.


DAPPER