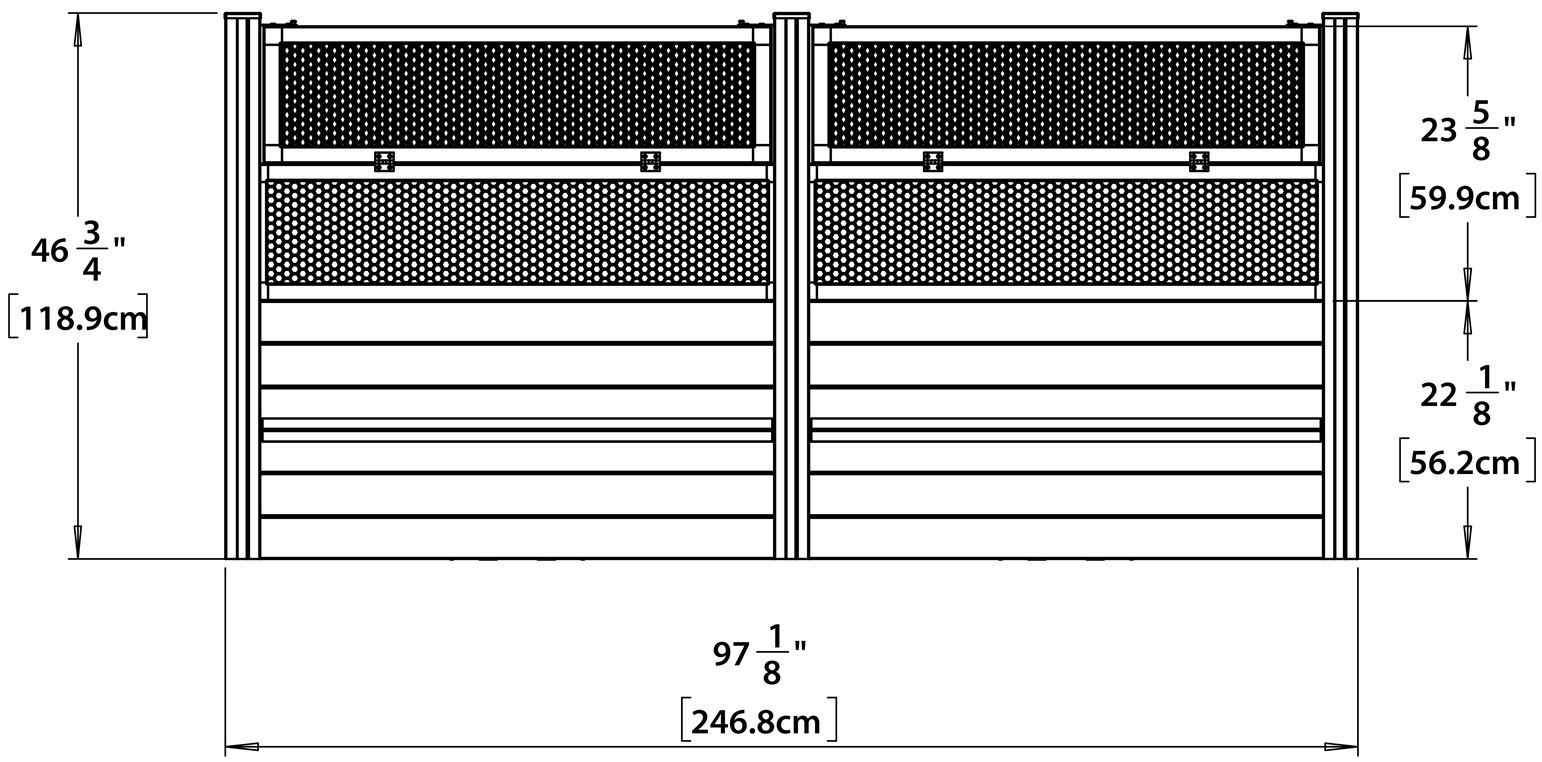
46 3/4"
[118.9cm]
23 5/8"
[59.9cm]
22 1/8"
[56.2cm]
97 1/8"
[246.8cm]

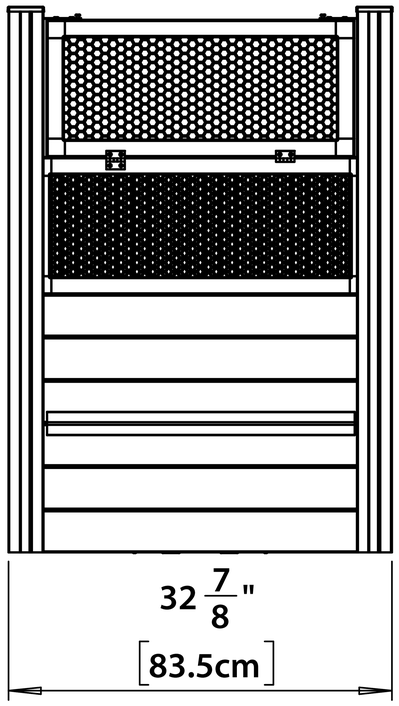
32 7/8"
[83.5cm]

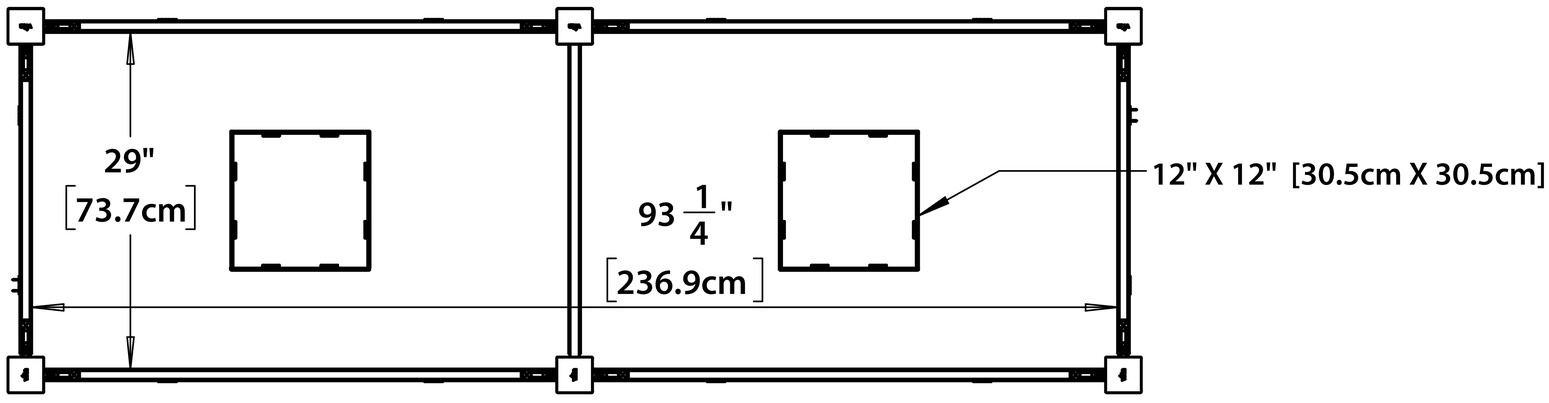
29"
[73.7cm]
93 1/4"
[236.9cm]
12" X 12" [30.5cm X 30.5cm]