5:1 High Ratio Oil Pump

Manual

The Manual of Oil Pump

Read the following precautions and instructions before you begin assembly or using.

Failure to comply with these instructions could result in personal injury or property damage. Keep these instructions in a convenient location for future reference.

Important Note

The guarantee will be void if the pump has been altered in any way.

Profile

Oil pumps can be used to transfer lubrication oil, waste oil and antifreeze liquids.

This manual is applicable to the following pump only, please confirm your pump is included.

Specification

Item No.	1701054	1701055	1701056
Compression Ratio	5:1		
Operating Pressure(bar/psi)	5-8 / 70-115		
Max. fluid Pressure (bar/psi)	40/580		
Air Consumption (L/min M3/hour)	180/6.5		
Capacity (L/min Gallon/min)	25/6.6		
Tube Diameter (mm/inch)	42/1.65		
Suction Tube Length (mm/inch)	270/10.6, Wall installed / Extension transfer	730/28.7	940/37
Air Inlet Connection	1/4" quick plug / 1/4" NPT female		
Oil delivery Connection	Male 3/4"		
Max. Viscosity Oil Delivered	SAE 240		
Temperature Oil Delivered	-10~50℃		
Noise Level (dB)	82		

5:1 Series Oil Pump Exploded View

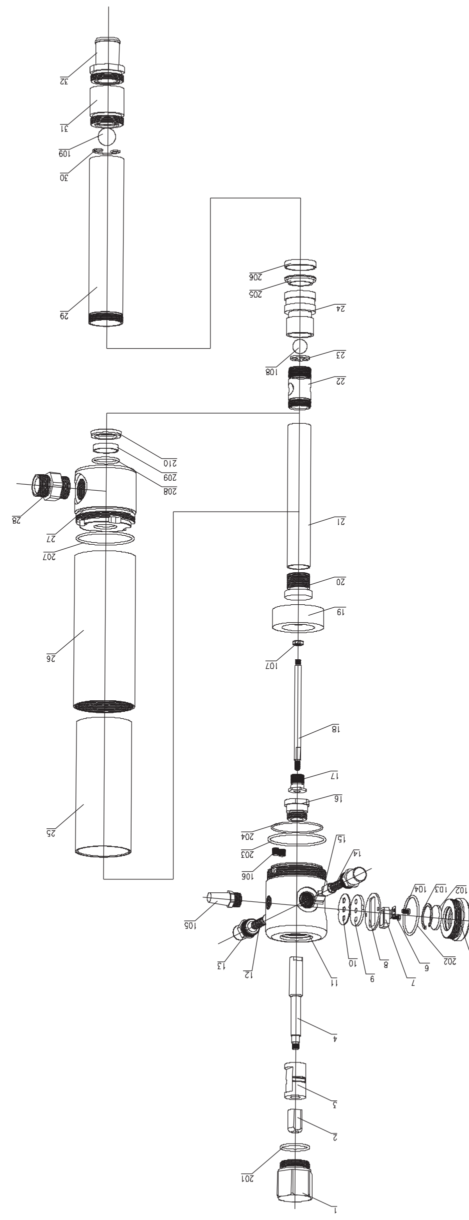

5:1 Series Oil Pump Part List

Appendix

Code	Name	Quantity
1	Air motor cover	1
2	Air motor shell inside	1
3	Slider	1
4	Bracket	1
5	Air center cover	1
6	Press piece	1
7	Slider	1
8	Securing washer	1
9	Goasket	1
10	Soft gasket	1
11	Air control center	1
12	Spring	2
13	Spring shell	2
14	Spring seat	2
15	Trip shoe guide	2
16	Bracket	1
17	Screw	1
18	Shaft	1
19	Piston	1
20	Piston connect cover	1
21	Piston shaft	1
22	Piston stem	1
23	Baffle	1
24	Small piston	1
25	Piston cover	1
26	Cut cover	1

Code	Name	Quantity
27	Side cover	1
28	Outlet	1
29	Suction tube	1
30	Spring circlip	1
31	Valve seat	1
32	Filter	1
101	Quick coupling	1
102	Silencer	1
103	Small circlip	1
104	Screw	2
105	Silencer	1
106	Screw	1
107	Nut	1
108	Ball	1
109	Ball	1
201	O-ring	1
202	O-ring	1
203	O-ring	1
204	O-ring	1
205	U seal	1
206	Guiding	1
207	O-ring	1
208	O-ring	1
209	Guiding	1
210	U-ring	1

Troubleshooting

Problem	Possible Causes	Solutions
The pump continues to operate after the gun trigger has been released	1. The is a oil leak at some point of the circuit 2. Valve sets (part No.24 and 208, 209, 210, 205, 206) close incorrectly due to dirt or wearing.	1. Check and tighten unions. Repair the leak. 2. Substitute damaged elements.
Reduction of the oil delivery, or reduced pressure in the oil delivery.	1. Silencer (105) dirtied 2. Blocked at some point of the oil circuit 3. Ball valve set (31, 109) closes incorrectly due to dirt or wearing.	1. Clean or recharge silencer 2. Use clean oil 3. Substitute damaged elements
Air loss through the air exhaust	1. The sliding valve (7) does not close properly. 2. Broken press piece (6) 3. Damaged O-ring (203,204) 4. Damaged piston (19) 5. Broken spring (12)	1. Disassemble and clean. Substitute in case of damage. 2. Substitute damaged elements
Oil leaks through the air exhaust	Seal set (208, 210) damaged	Substitute damaged elements

If the pump has anything wrong, please contact dealer or their technical supporter.
We don't recommend customer repair the pump themselves.

Storage and Maintenance

Pumps are delivered in appropriate carton boxes. Packaging material should be properly disposed.

Handling and storage of the new pump do not require any special procedures.

However after the pump has been used, empty the used oil in the suction tube into an appropriate container. This is done by overturning the pump.

The dust in compressed air can slow down and even block the motor cylinder. The following steps may prevent this from happening:

1) Let in 50 gram of Vaseline oil or other lubricator from the air inlet hole weekly, operate the pump for several minutes after having lubricator.
2) Turn on the pump for several minutes until moving parts is fully lubricated.
3) You may repeat the above operation if necessary.
4) The above steps should be carried out on a weekly base.

For the pumps that are attached with compressed air treatment equipment, please empty the water retained in the reservoir of the filter-purger frequently.

For the pumps that are attached with a lubricator, please pay close attention to the lubricator's oil level and refill with SAE 20, SAE 30 or antifreeze oil for extreme conditions when necessary.

Note:

The user should perform only routine maintenance operations (such as filters, silencers, cleaning…) with the pump in order not to damage it or compromise its safety.

Contact our sales or service center when the pump needs further maintenance.

General Safety Regulations

When the pump is connected to the compressed air supply:

1. The compressed air must be filtered to avoid dust and moisture into pump
2. The max compressed air pressure must not exceed 0.8Mpa/120psi
3. To deliver oil, press the knob on the delivery pistol; delivery stops when the knob is released but the whole system remains under pressure
4. Position the pistol so that the circuit can't open accidentally. Otherwise oil could leak

onto the ground

5. Never point the pistol at people or object.
6. Press the pistol knob
7. Always cut off the air supply after use so that oil can't leak out in case one of the pump's components should break
8. Use only original spare parts in case the pump has to be repaired or its components have to be replaced
9. Empty all the oil from the pump in case it has to be disposed of
10. When not in use, turn off compressed air to stop pump
11. Do not use the pump near open flames. Do not smoke during this operation
12. Wear oil-proof gloves
13. Do not throw the oil away. Used oil has to be disposed of according to national environmental regulations
14. The pumps can be used only to deliver lubricants, used oil or antifreeze liquids. Do not use the pump for any other substance

How to Use

Directly Fitted Pump into the Drum

1. Insert the suction tube of pump into the drum and secure with ring nut, suitable for commercial drums with 57 diameter hole and threading 2" BSP
2. Fit a oil delivery tube for oil outlet of the air operated pump using only high quality tubes (normally 3/4", according to DIN-SAE norms(), by means of 3/4" BSP threading fitting.
3. Oil delivery pistol: Connect delivery tube with delivery pistol using suitable pipe fittings, and point the pistol at right place.
4. Air inlet connection is 1/4" quick plug (or 1/4" NPT female) in all versions. Compressed air connection (to be supplied by the customer) should be done using suitable tube.
5. A pressure regulator to keep the pump's working pressure at the best possible level (max 5-8 bar) between the pump and the compressed air line
6. A cut-off switch can enable the operator to stop the pump at any given moment by cutting the air supply off between the pump and the compressed air line
7. Switch on all switch.

Wall Installed

Part List

Code	Name	Quantity
1	Oil pump	1
2	Wall bracket	1
3	Pump adapter	1
4	Flexible suction hose	1
5	Suction hose adapter	1
6	Bung adapter	1
7	Rigid suction tube	1
8	Spring circlip	1
9	Ball	1
10	Valve seat	1
11	Filter	1

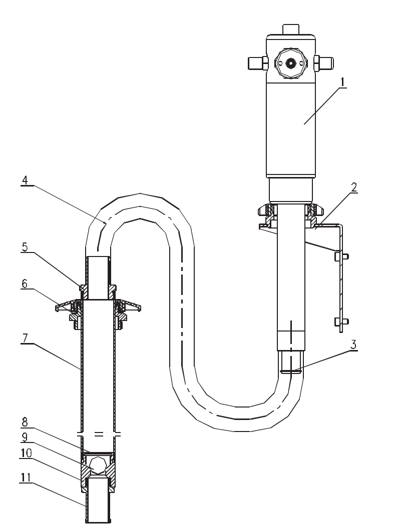

Proceed As Follows

1. Secure the bracket to the wall using the dowels at about 1200mm height appropriate for the tank's dimensions. Make sure that the wall is solid and thick enough for the dowels. Do not interfere with hydraulic tubes or electric lines.
2. Secure the pump to the bracket 2
3. Connect the flexible suction tube 4 to the pump using the clamp provided.
4. Connect the rigid suction 7 to the end of the flexible suction tube 4 using the elastic clamp provided
5. Put the bung adapter 6 into the drum hole.
6. Put the rigid suction tube 7 into the pump and secure it in place

Extension Transfer

Part List

Code	Name	Quantity
1	Oil pump	1
2	Bung adapter	1
3-1	Top connection	1
3-2	Extension 500mm tube	1
3-3	Extension sleeve	1
3-4	Extension 200mm tube	1
3-5	Foot connection	1
4	Foot valve	1
5	Filter	1

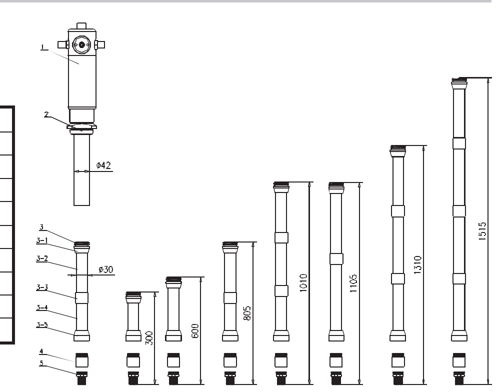

Proceed as follows

1. Depending on the length of the suction tube the desired extension length. Can be realized by using the modular extension elements (See the examples given above)
2. Example of possible application to pump with drum or rigid suction tube for obtaining personalized lengths according to needs.
3. Remove filter and foot valve from the stub pump, screw the extension tube on (W/top connection), then screw filter and foot valve on the extension tube (foot connection end!)

Connect the Pump with Other Accessories:

Part List

Code	Name
1	Oil pump
2	Bung adapter
3	Oil pistol
4	Hose with fitting
5	Air hose with quick coupling
6	Drum
7(7-1, 7-2, 7-3)	Filter, pressure regulator and lubricator

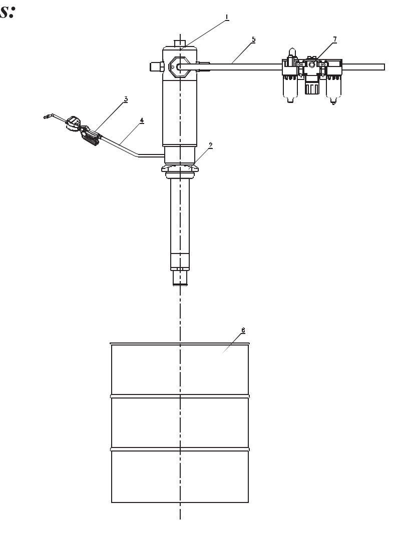

2.09.05.30.103

中谷包装制品有限公司 C M Y K 出片日期：2010/05/31