Outdoor Rocking Chair

Assembly Instruction

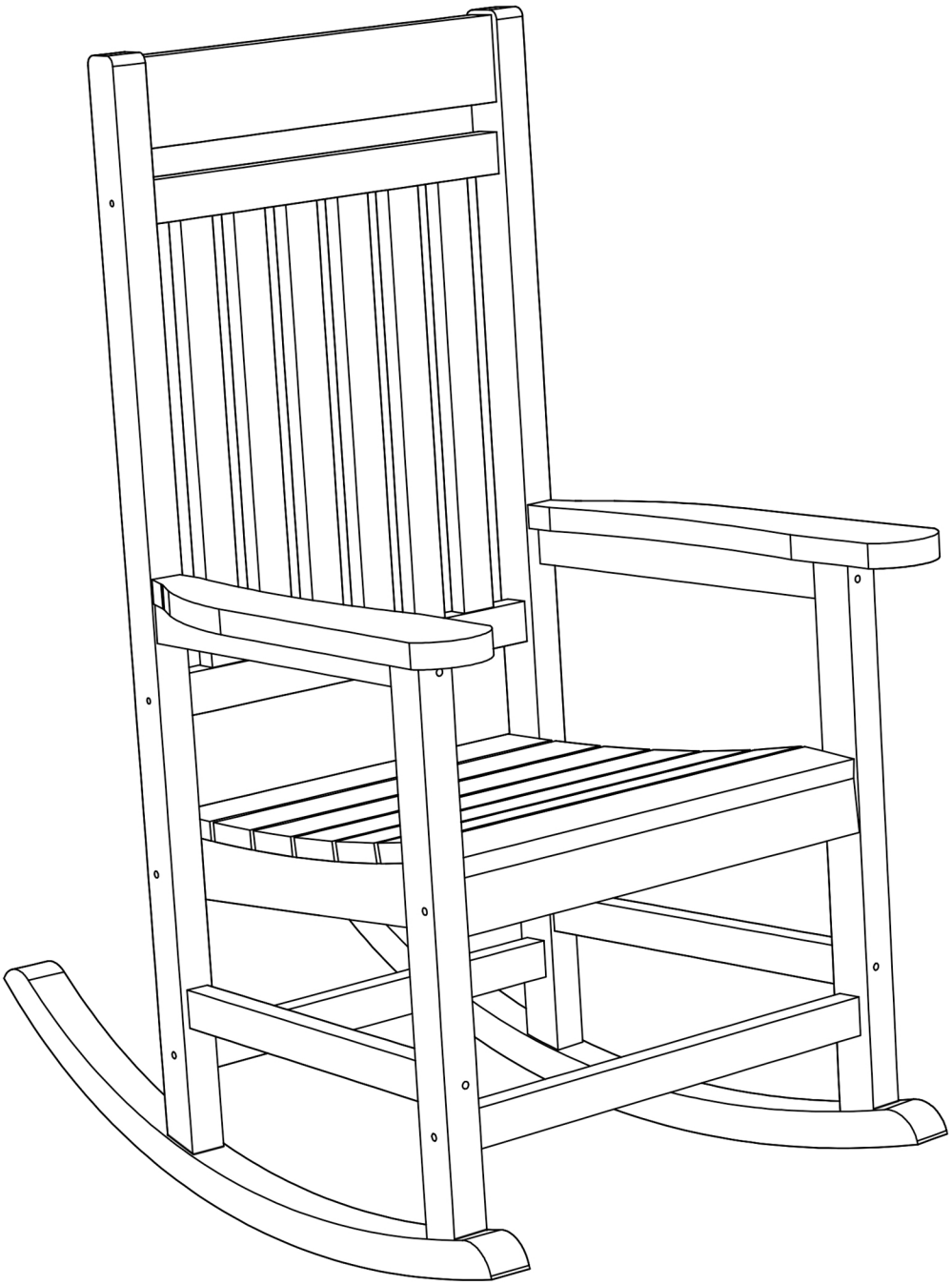

INTRODUCTION

Thank you for purchasing our products. Please read the instructions carefully before installation and keep it in a safe place for future reference. If you need any assistance or support, please feel free to contact our customer support team.

PRECAUTIONS

1. There are many components and accessories in the package. Each component and accessory is labeled with a letter or a number, check carefully before using any of them. Keep them away from children to prevent accidents.

2. Please install the product on a clean and soft underlay (such as carpet or cardboard) to avoid scratching or damaging the surface of the product.

3. The main components of the product are relatively heavy. Please pay attention to safety during installation.

4. The product is not stable during installation. Please do not move it randomly before it is completely installed.

5. If you have any questions during installation, please contact the customer service in time.

*** PLEASE BE SURE TO FOLLOW THE INSTALLATION STEPS TO AVOID UNNECESSARY LOSSES CAUSED BY IMPROPER INSTALLATION.**

*** IF YOU NEED FURTHER ASSISTANCE, PLEASE GET IN TOUCH WITH THE CUSTOMER SERVICE ONLINE.**

Parts List

A	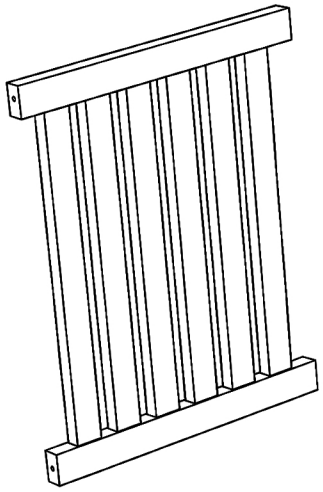	1PC	G	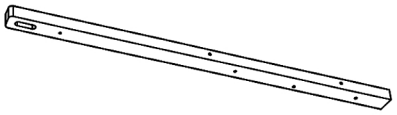	2PCS
			H1		1PC
			H2		1PC
			I	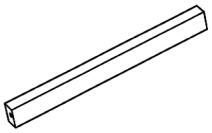	2PCS
B	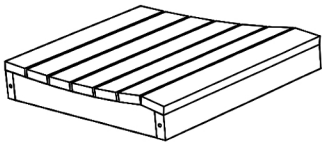	1PC	J		2PCS
C	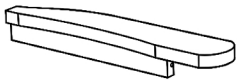	1PC	AA	 6*35 Screw	4PCS
D	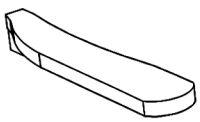	1PC	BB	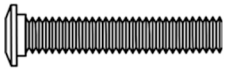 M6*60	8PCS
E	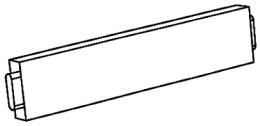	1PC	CC	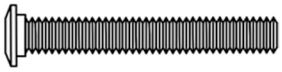 M6*70	12PCS
F	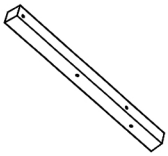	2PCS	DD		1PC
			EE	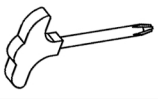	1PC

STEP 1

BB		×4
DD	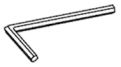	×1

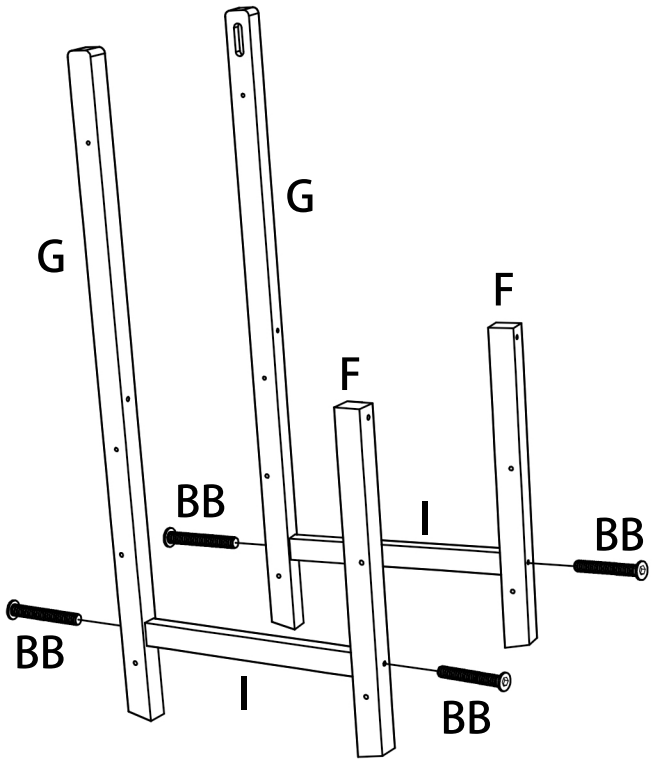

STEP 2

AA	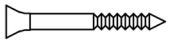	×4
EE	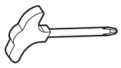	×1

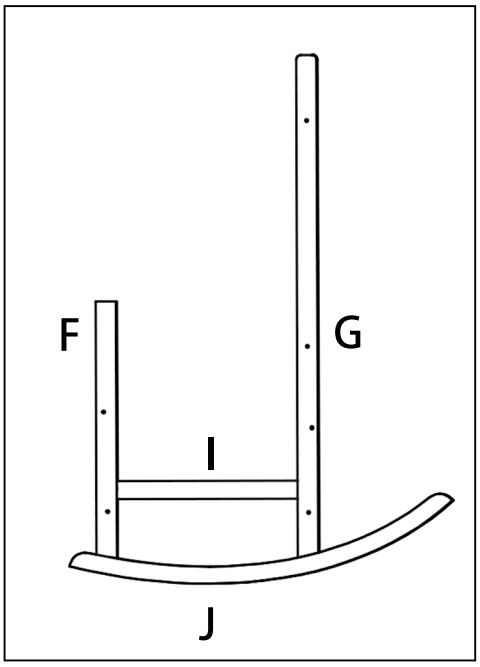

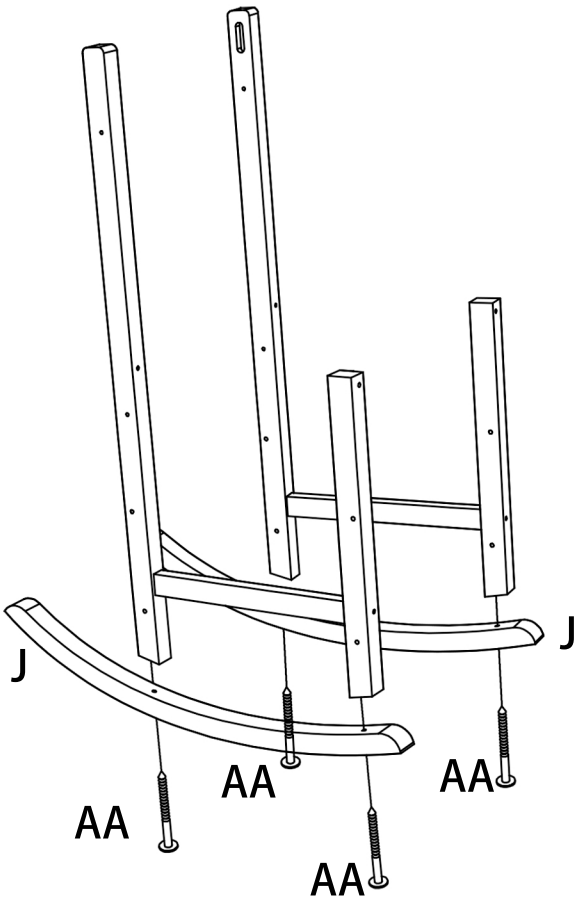

STEP 3

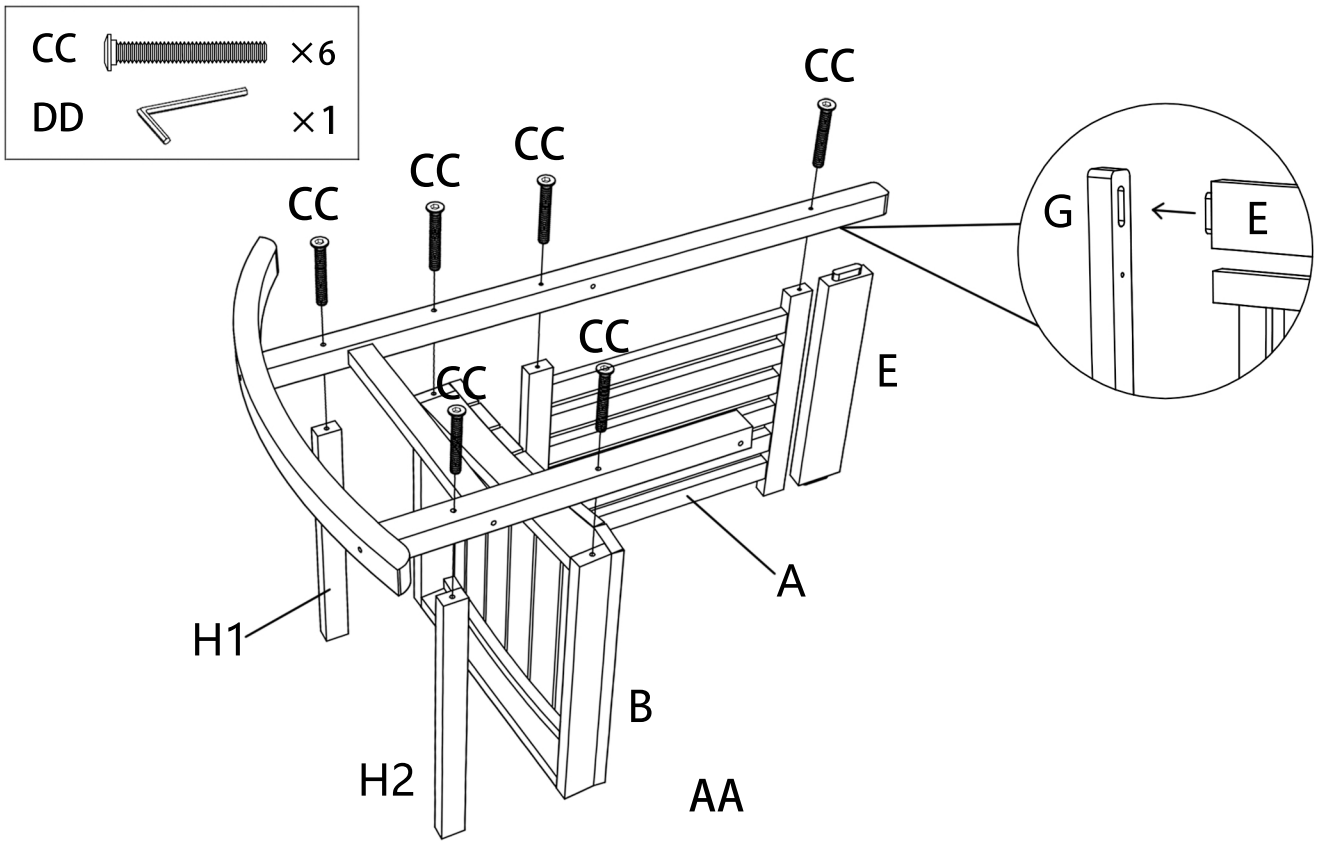

STEP 4

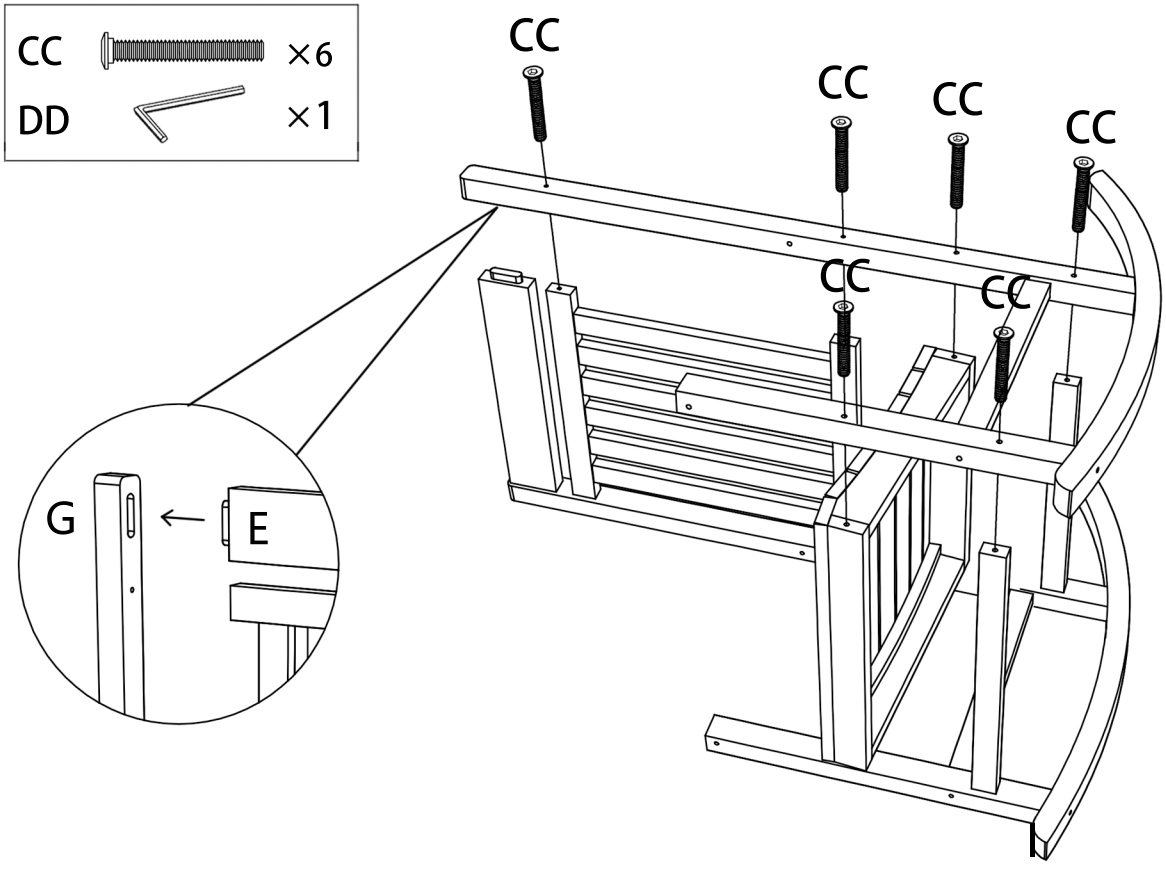

STEP 5

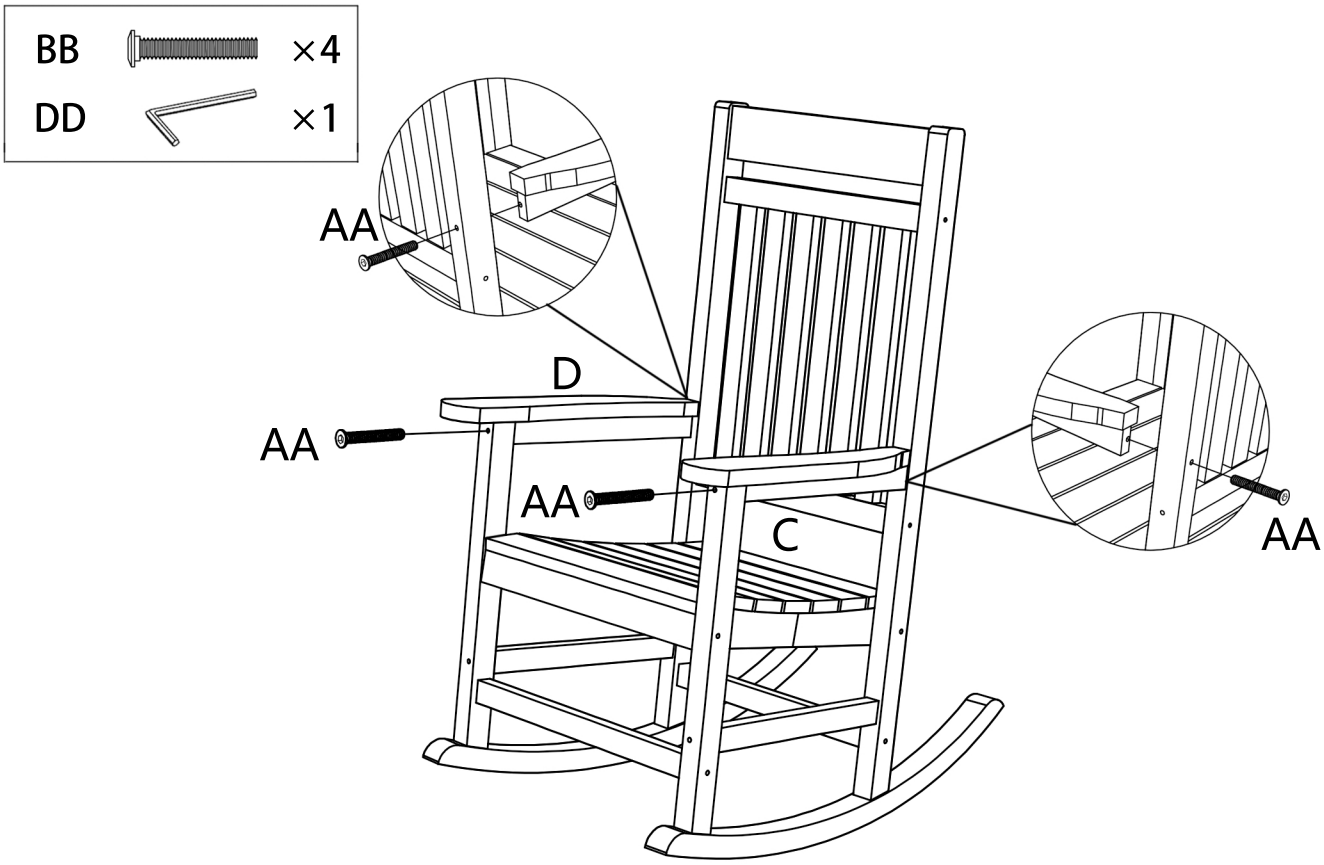

STEP 6

