EP Decking – Wood Plastic Composite (WPC) Fencing Guide

We offer two types of post holders for fence installations, both designed to ensure strength and stability.

Types of Post Holders

(a) Squared Bottom Post Holder

Designed for surface mounting on new or existing concrete.

(b) Pronged Post Holder

Suitable for in-ground installation.

Installation

(a) Squared Bottom Post

For existing concrete, the existing concrete floor must have minimum thickness of 6" with minimum of 150 lbs/cu ft.

(1) **Position the Post Holder**

Place the squared bottom post holder on the concrete surface or retaining wall. Mark the positions of the four holes.

(2) **Drill the Holes**

Drill holes 9/16” in diameter and 2 1/8” deep.

(3) **Secure the Post Holder**

Insert the expansion anchors without nuts into the holes, line up with the holes and affix the post holder securely with nuts. Ensure the side with holes does not face the direction where the fence boards will be installed.

Confirm the post is perfectly vertical (90° to the ground).

(4) **Spacing**

For sections of 6", maintain a distance of 72 inches between the centers of two post holders. Please adjust accordingly for distance less than 72 inches.

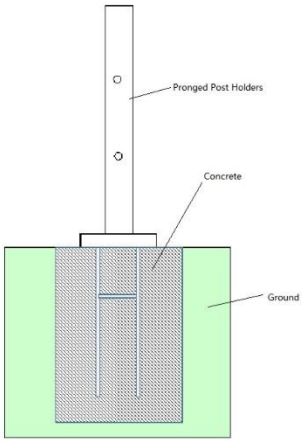

(b) Pronged Post Holder

(1) **Prepare the Hole**

Dig a hole at your desired starting point.

Minimum recommended dimensions: 9” x 9” x 24”.

(2) **Pour Concrete**

Fill the hole with wet concrete.

(3) **Install the Post Holder**

Insert the pronged side into the wet concrete until the square plate rests on the surface.

Ensure the side with holes does not face the direction where the fence boards will be installed.

Verify the post is perfectly vertical (90° to the ground).

For sections of 6", maintain a distance of 72 inches between the centers of two post holders. Please adjust accordingly for distance less than 72 inches.

(4) **Cure the Concrete**

Allow the concrete to cure for at least 48 hours or until fully set.

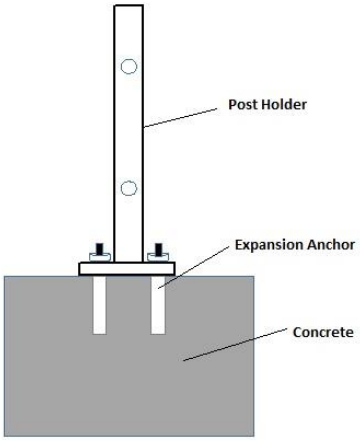

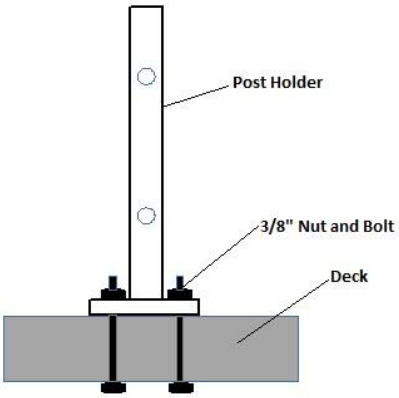

For Decks (Nuts and Bolts Not Included)

(1) **Position the Post Holder**

Place the squared bottom post holder on the concrete surface or retaining wall. Mark the positions of the four holes.

(2) **Drill Through the Deck**

Drill through the marked positions.

(3) **Secure the Post Holder**

Affix the post holder with galvanized nuts and bolts.

Ensure the side with holes does not face the direction where the fence boards will be installed.

Confirm the post is perfectly vertical (90° to the deck).

(4) **Spacing**

For sections of 6", maintain a distance of 72 inches between the centers of two post holders.

Support

For questions or concerns, contact us:

Email: info@epdecking.com
Phone: (866) 344-2600 (Sales)

Enjoy Your New Fence!