JOBSMART®

6 GAL PANCAKE AIR COMPRESSOR

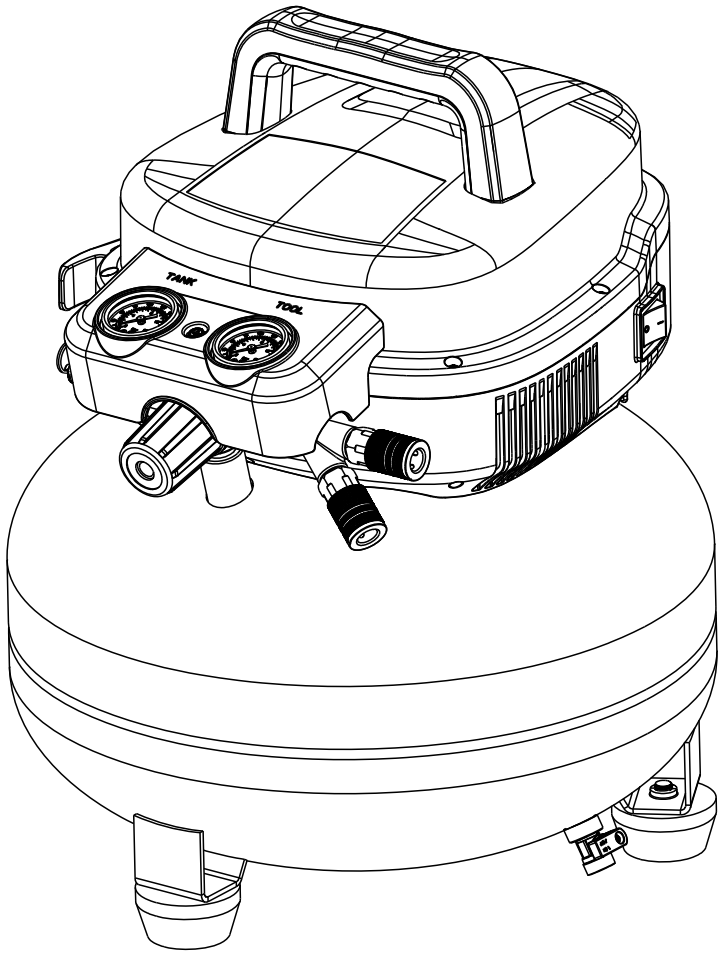

Product Model # 2243051



Read and understand this operator's manual thoroughly before using the product. It contains important information for your safety as well as operating and maintenance advice.

Table of Contents

Safety Guidelines..... 3

Key Parts Diagram..... 5

Parts Description..... 6

Operating Instructions..... 7

Care and Maintenance..... 8

Troubleshooting..... 9

Product Specifications..... 11

Exploded View..... 12

Parts List..... 12



SAVE THESE INSTRUCTIONS

This manual contains important safety and operating instructions.
Read all instructions and follow them with use of this product.

Safety Guidelines

Important Safety Information

The manufacturer cannot possibly anticipate every possible circumstance that might involve a hazard. The warnings in this manual, and the tags and decals affixed to the unit are, therefore, not all-inclusive. If you use a procedure, work method, or operating technique that the manufacturer does not specifically recommend, you must satisfy yourself that it is safe for you and others. You must also make sure that the procedure, work method, or operating technique that you choose does not render the compressor unsafe.

Safety Symbols and Meanings

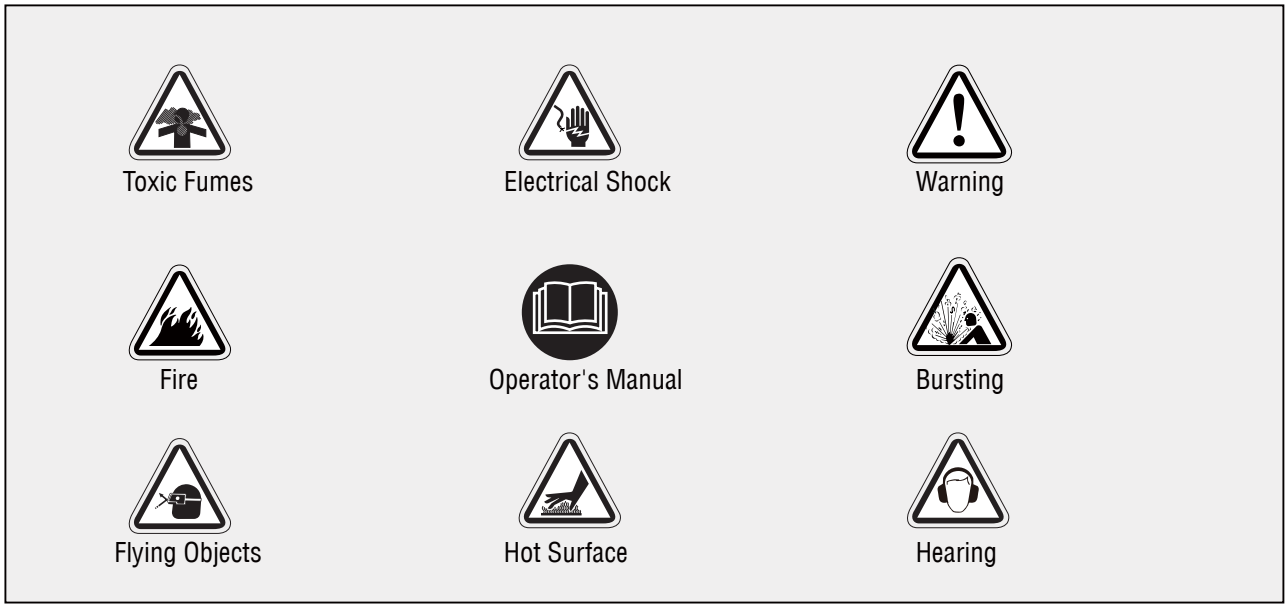

⚠ The safety alert symbol indicates a potential hazard to personal injury. A signal word (DANGER, WARNING, or CAUTION) is used with the alert symbol to designate a degree or level of hazard seriousness. A safety symbol may be used to represent the type of hazard. The signal word *NOTICE* is used to address practices not related to personal injury.

⚠ **DANGER** indicates a hazard which, if not avoided, *will* result in death or serious injury.

⚠ **WARNING** indicates a hazard which, if not avoided, *could* result in death or serious injury.

⚠ **CAUTION** indicates a hazard which, if not avoided, *could* result in minor or moderate injury.

Notice address practices not related to personal injury.

Safety Information

DO NOT OPERATE THIS UNIT UNTIL YOU READ AND UNDERSTAND THIS INSTRUCTION MANUAL FOR SAFETY, OPERATION, AND MAINTENANCE INSTRUCTIONS.

WARNING



Risk of fire caused by sparks from motor and pressure switch could result in death or serious injury. Do not operate compressor near flammable gas or vapor. Never store flammable liquids or gases in vicinity of compressor.



High pressure air could result in death or serious injury. Never operate above maximum operating pressure of the spray gun or tool. Drain water from tank after each use.

- Do not weld or repair tank.
- Do not operate with pressure switch or safety valve set above maximum allowable working pressure.



Hot compressor surfaces could result in serious injury. Allow compressor to cool before touching.



Inhalation hazard. Using compressor to supply breathing air could result in death or serious injury. Do not use compressor to supply breathing air.



Risk of fire could result in death or serious injury.

- Do not spray flammable materials in vicinity of any flame or ignition sources including the compressor unit.
- Do not restrict compressor ventilation openings or place objects against or on top of compressor. Operate compressor only in a clean, dry, well ventilated area.
- Do not operate unattended. Always turn off and unplug unit when not in use.



Risk of serious eye injury. Always wear ANSI Z87.1 approved safety glasses when using air compressor. Do not spray any part of the body.



Always wear hearing protection when using an air compressor. Failure to do so may result in hearing loss.



Shock risk could result in death or serious injury. Only connect compressor to a properly grounded receptacle. KEEP CHILDREN AWAY FROM THE AIR COMPRESSOR AT ALL TIMES.



Dust can be created when cutting, sanding, drilling or grinding materials such as wood, paint, metal,concrete, cement, or other masonry. To reduce your exposure to these chemicals, work in a well ventilated area and ALWAYS wear approved safety equipment.



To reduce the risk of electric shock, do not expose to rain. Household Use Only. For Indoor Use Only.



This air compressor is supposed to be stored in ambient temperature condition : centigrade temperature from -20 to +40ºC.



This product can expose you to chemicals including lead, which is known to the State of California to cause cancer, birth defects or other reproductive harm. For more information go to www.P65Warnings.ca.gov.

Key Parts Diagram

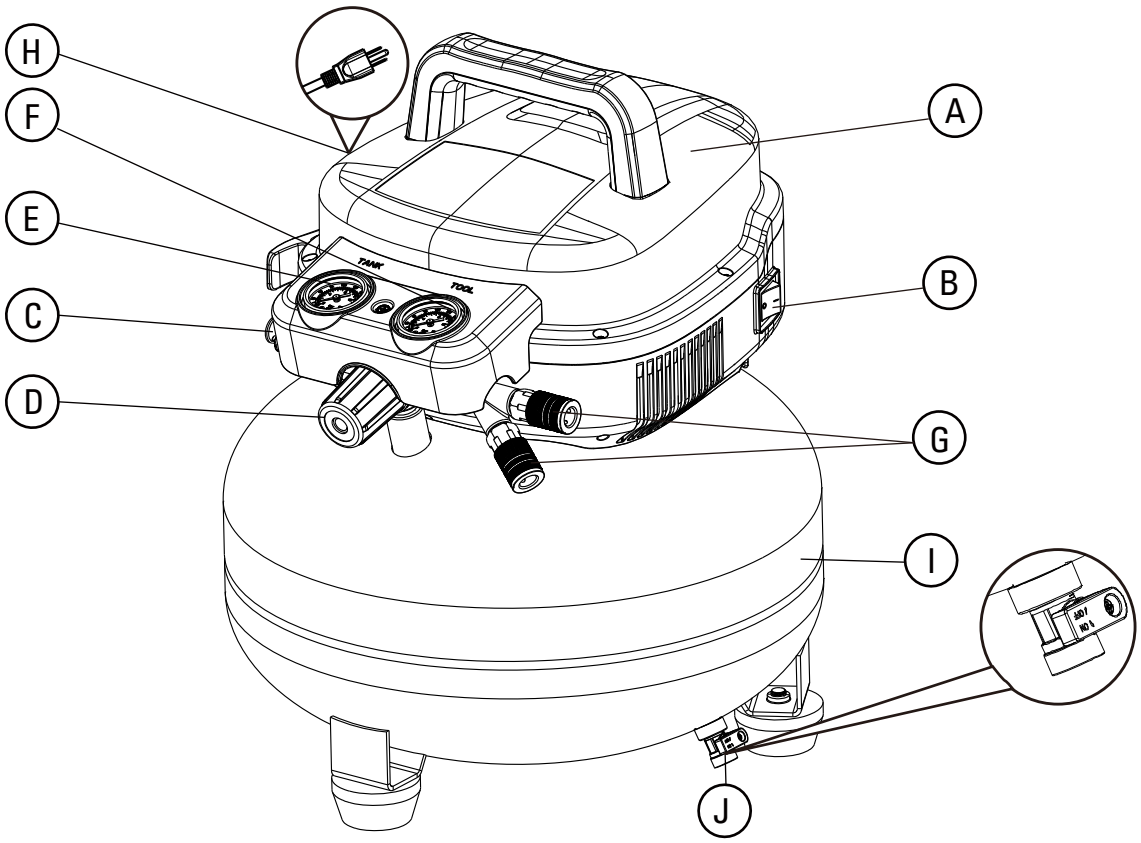

A.	ELECTRIC MOTOR & PUMP	F.	REGULATED PRESSURE GAUGE
B.	ON/OFF SWITCH	G.	2 QUICK COUPLERS
C.	SAFETY VALVE	H.	POWER CORD
D.	AIR PRESSURE REGULATOR	I.	AIR TANK
E.	TANK PRESSURE GAUGE	J.	DRAIN VALVE

Parts Description

A. ELECTRIC MOTOR: The motor is used to power the pump.
AIR COMPRESSOR PUMP: The pump is used to compress the air and discharge it into the tank via the piston moving up and down in the cylinder.

B. ON/OFF SWITCH: This switch turns on the compressor and is operated manually. When in the ON position, it allows the compressor to start up or shut down automatically, without warning, upon air demand. ALWAYS set this switch to OFF when the compressor is not being used, and before unplugging the compressor.

C. SAFETY VALVE: The valve is used to prevent system failures by relieving pressure from the system. When the pressure reaches the preset level the pressure switch will not shut down the motor, it will automatically pop open or you can pull the ring on the valve to open.

D. AIR PRESSURE REGULATOR: The regulator is used to adjust line pressure to the tool you are using. Turn the knob clockwise to increase pressure and counterclockwise to decrease pressure.

E. TANK PRESSURE GAUGE: The gauge is used to measure the store air pressure level of the tank. It is not adjustable by the operator, and does not indicate line pressure.

F. REGULATED PRESSURE GAUGE: The gauge is used to measure the regulated outlet pressure.

⚠ WARNING



Never attempt to open the drain valve when the tank pressure is more than 10 PSI.

G. QUICK COUPLERS: The quick coupler is connected to a quick connector which is connecting to air hose.

H. POWER CORD : This product is for use on a nominal 120-volt circuit and should be grounded. A cord with a grounding plug must be used. Make sure the product is connected to an outlet having the same configuration as the plug (see Figure 1). No adapter should be used with this product.
Check with a licensed electrician if the grounding instructions are not understood or there is doubt as to whether the product is properly grounded. Do not modify the plug provided. If it will not fit the outlet, have the proper outlet installed by a licensed electrician.

I. AIR TANK : The tank is used to store the compressed air.

J. DRAIN VALVE : The drain valve is used to remove moisture from the air tank after the unit is shut off.

⚠ DANGER



Improper installation of the grounding plug will result in a risk of electric shock. If repair or replacement of the cord or plug is necessary, do not connect the grounding wire to either flat blade terminal. The grounding wire is in the green outer surface.

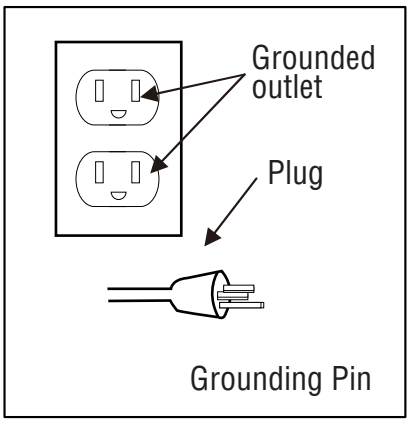

Figure 1

Operating Instructions

BEFORE EACH START UP

1. Set the ON/OFF switch (B) to the O (off) position.
2. Turn the air pressure regulator knob (D) counterclockwise until it stops.
3. Attach air hose/accessories or air tools (not included) to the air-line out let (G).

⚠ **WARNING** ⚠ **Risk of bursting.** Too much air pressure causes a hazardous risk of bursting. Check the manufacturer's maximum pressure rating for air tools and accessories. The regulator outlet pressure must never exceed the maximum pressure rating.

HOW TO START UP

1. Close the drain valve (J) by turning clockwise.
2. Plug in the power cord (H).
3. Set the ON/OFF switch (B) to the I (on) position and allow tank pressure to build. Motor will stop when tank pressure reaches "cut-out" pressure.
4. Turn the air pressure regulator (D) clockwise until desired pressure is reached.
5. The compressor is ready for use.

⚠ **WARNING**

High temperatures are generated by the electric motor and the pump. To prevent burns or other injuries,

· DO NOT touch the compressor while it is running. Allow it to cool before handling or servicing.

· Keep children away from the compressor at all times.

When adjusting from a higher to a lower pressure, turn the knob counterclockwise past the desired setting. Then turn clockwise to reach the desired pressure.

· Do not exceed operating pressure of the tool or accessory being used.

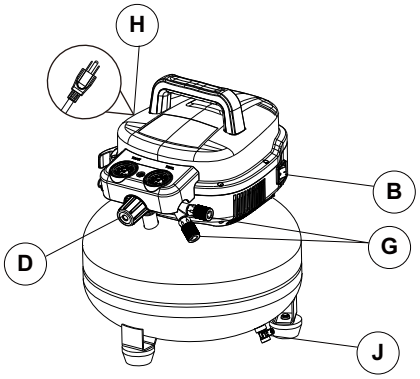

HOW TO SHUT DOWN

1. Set the ON/OFF switch (B) to the O (off) position.
2. Unplug the power cord (H).
3. Tip the compressor so the tank drain valve is at the bottom of the tank, then open the tank drain valve counterclockwise to allow moisture to drain from the tank. Be careful of liquid spray in the tank and prepare the container for liquid.

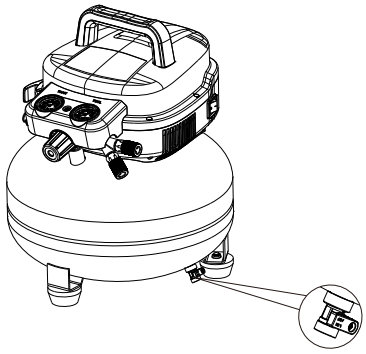

⚠ **CAUTION!**

Escaping air and moisture can propel debris that may cause eye injury. Wear safety glasses when opening the drain valve.

⚠ **WARNING!**

To avoid personal injury, always shut off and unplug the unit and relieve all air pressure from the system before performing any service on the air compressor.

Risk of unsafe operation. Unit cycles automatically when power is on. When performing maintenance, you may be exposed to voltage sources, compressed air or moving parts. Personal injuries can occur. Before performing any maintenance or repair, disconnect power source from the compressor and bleed off all air pressure.

Care and Maintenance

WARNING:



To avoid personal injury, always shut off and unplug the unit and relieve all air pressure from the system before performing any service on the air compressor.

Regular maintenance will ensure trouble-free operation.

TASK	DESCRIPTION	SERVICE INTERVAL
Drain the tank	To prevent corrosion inside the tank, the condensation must be drained at the end of every workday. Be sure to wear protective goggles. Relieve the air pressure in the system and then open the drain valve on the bottom of the tank. 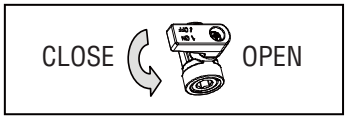	Daily
Test for leakage	Check all connections to see if tight. A small leak of any of part (the tank, hoses, pipe connections or transfer tubes) will reduce the unit's performance. Spray a small amount of soapy water around the area of the suspected leak with a spray bottle. If bubbles appear, repair or replace the faulty component. Do not overtighten any connections.	Monthly
Storage	Before storing the unit for a long period, use an air blow gun to clean all dust and debris from the compressor. Disconnect and coil the power cord. Pull the pressure relief valve to release all pressure from the tank. Drain all moisture from the tank. Cover the entire unit to protect it from moisture and dust.	N/A

Troubleshooting

PROBLEM	POSSIBLE CAUSE	CORRECTIVE ACTION
Low pressure not enough air or compressor does not stop	1. Tank drain valve is open. 2. Fittings leak. 3. Prolonged or excessive use of air. 4. Compressor not large enough. 5. Hole in air hose. 6. Tank leaks. 7. Blown seals. 8. Valve leaks. 9. Leaking or worn piston.	1. Close tank drain valve. 2. Check fittings with soapy water. Tighten or reseal leaking fittings. DO NOT OVER TIGHTEN. 3. Decrease amount of air used. 4. Check air requirement of accessory.If it is higher than CFM and pressure supplied by compressor, you need a larger compressor. Most accessories are rated at 25% of actual CFM while running continuously. 5. Check and replace if necessary. 6. ⚠ **WARNING:** Immediately replace tank. DO NOT attempt to repair. 7. Replace compressor assembly. 8. Replace compressor assembly. 9. Replace compressor assembly.
Air leaks from regulator, or regulator does not regulate pressure	1. Dirty or damaged regulator internal parts.	1. Replace regulator or internal parts.
Regulated pressure gauge reading drops when air accessory is being used	1. This is normal. 2. Compressor not large enough.	1. If pressure drops to low, adjust regulator while accessory is used. 2. Check air requirement of accessory. If it is higher than CFM and pressure supplied by compressor, you need a larger compressor. Most accessories are rated at 25% of actual CFM while running continuously.
Pressure relief valve opens	1. Tank pressure exceeded normal rating pressure. 2. Pressure switch stuck.	1. Replace pressure switch. 2. Replace pressure switch.

Troubleshooting

PROBLEM	POSSIBLE CAUSE	CORRECTIVE ACTION
Motor will not run	1. Tank pressure exceeds preset pressure switch limit. 2. Fuse blown or circuit breaker tripped. 3. Check valve is stuck open. 4. Wrong wire gauge in cord or excessive extension cord length. 5. Loose electrical connections.	1. Motor will start automatically when tank pressure drops below tank cut-in pressure. 2. Replace blown fuse or reset circuit breaker. Do not use fuse or circuit breaker with higher rating than specified for you branch circuit. ● Check for proper fuse; "Fusetron" type T is acceptable. ● Check for low voltage and proper extension cord size. ● Disconnect other applications from circuit. Operate compressor on a dedicated circuit. 3. Remove and clean or replace. 4. Check for proper gauge and extension cord length. 5. Contact authorized service center.

Product Specifications

Model No.	2243051
Pump	Oil free, Direct drive, Single stage
Motor	1.0 HP†
Voltage/Amps/Hz	120/12/60
Air Tank Capacity	6 Gallon
Cut-in Pressure	120 PSI†
Cut-out Pressure	150 PSI†
CFM @ 40 PSI	3.6*
CFM @ 90 PSI	2.6*
Power Cord	SJT16 AWG/6ft. Length

NOTE: Avoid use of extension cords. If use of an extension cord cannot be avoided, the cord should be a minimum wire size of 12 AWG and no longer than 30 feet. Use only a 3-wire extension cord that has a 3-blade grounding plug and a 3-slot receptacle that will accept the plug on the product.

***CFM: Cubic Feet per Minute.**

† This compressor is rated in accordance with ISO 1217, displacement compressors acceptance tests.

Exploded View

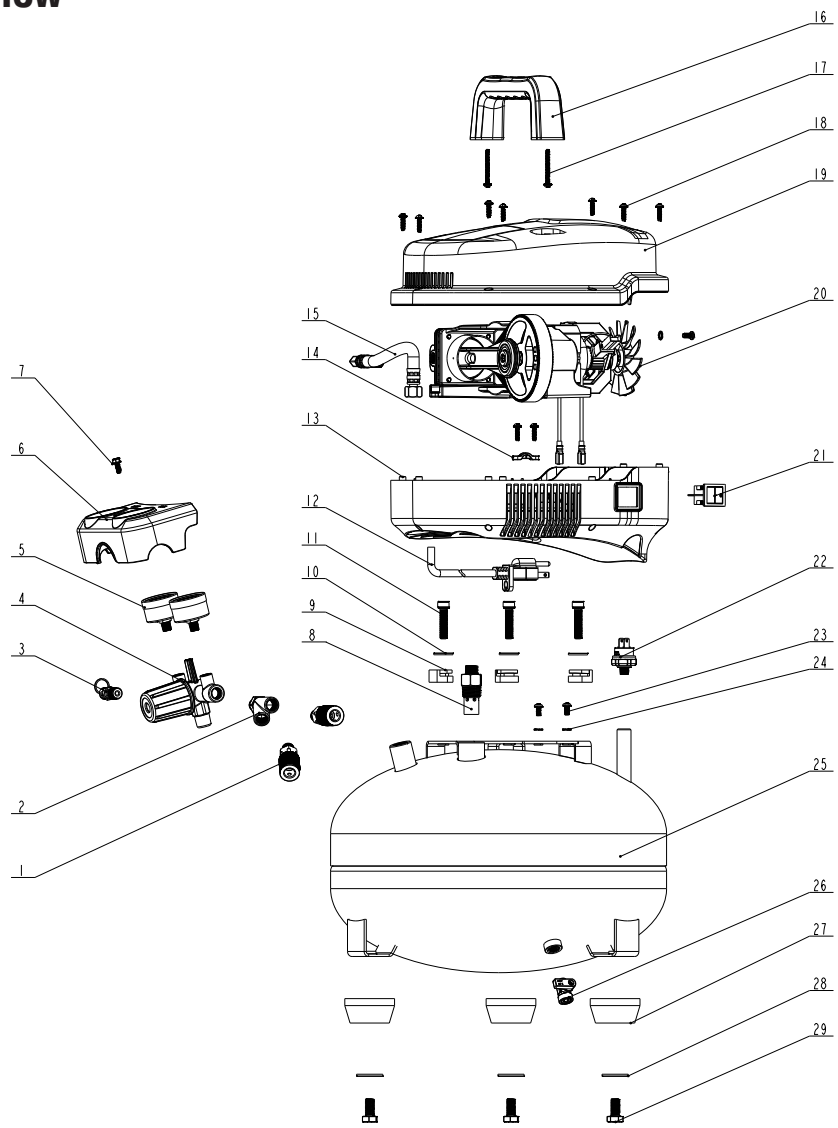

Parts List

PART	DDESCRIPTION	QTY
1	Quick Coupler	2
2	Manifold	1
3	Safety Valve	1
4	Pressure Regulator	1
5	Tank Pressure Gauge	2
6	Pressure Gauge Shroud	1
7	Hex-Bolt M5×12	1
8	Check Valve	1
9	Rubber Pad	3
10	Washer Ø8	3
11	Hex-Bolt M8×35	3
12	Power Cord	1
13	Bottom Shroud	1
14	Crimping Board	1
15	Transfer Tube	1

PART	DDESCRIPTION	QTY
16	Handle	1
17	Screw ST 4.2 x 50F	2
18	Screw ST 3.9 X 16F	9
19	Top Shroud	1
20	Assembly Motor/Pump	1
21	Power Switch	1
22	Pressure Switch	1
23	Screw M5×10	3
24	Lock Washer Ø5	3
25	Air Tank	1
26	Drain Valve	1
27	Rubber Foot	3
28	Washer Ø10	3
29	Hex-Bolt M10×20	3