NUU GARDEN®

ENJOY LIFE · SHARE HAPPINESS

INSTRUCTION MANUAL

5PCS Iron Dinging Set

SID012-01

INTRODUCTION

Thanks for purchasing and trusting NUUGARDEN with your home decorating plans. This product is a furniture designed and made by NUUGARDEN Corp.

We are committed to R&D innovation and creating the most refined, diverse choice of outdoor collection.

After unpacking and before every use, check whether the item shows any damages. In addition, check that you have all parts and hardware before assembly. If there is any damage, please do not use and just call customer service at (800) 257-7108 or send an email to service@nu-ugarden.com. If you do not have all the parts lists, have your dealer contact us and they will be sent to you immediately.

This furniture is intended for indoor and outdoor use. Please take time to read and follow the instruction below. Use the item as described in this operating manual. We accept no liability for damages caused by improper use.

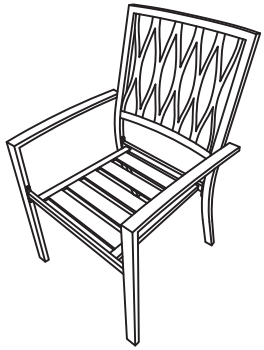

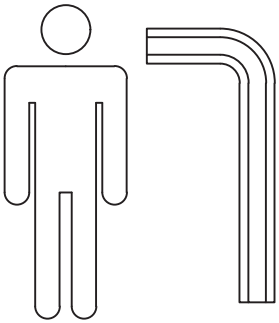

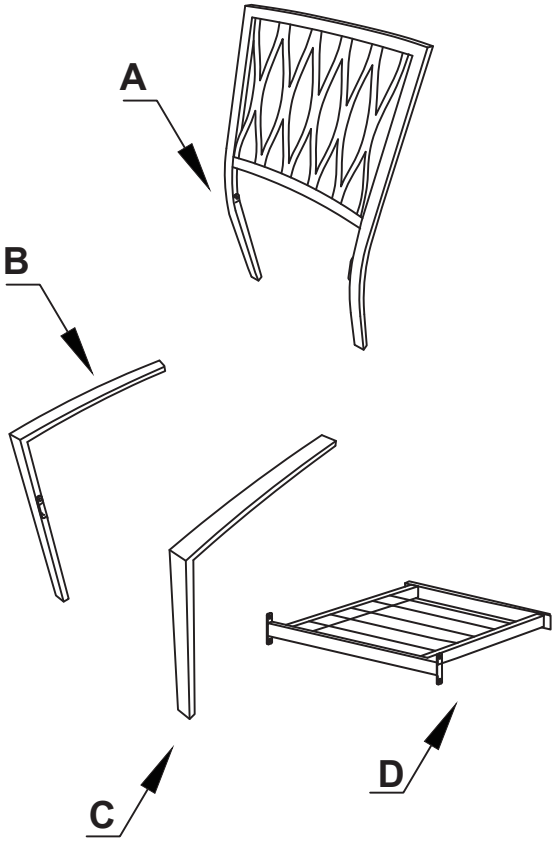

Part Number	Images and Sizes	Qty.
A		1
B	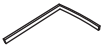	1
C	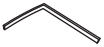	1
D		1
E	M6*18	10
F		10
G		1

ASSEMBLY INSTRUCTIONS

CAVEAT

Note: Please do not tighten any bolt until all bolts have been put into right place.
If you tighten one bolt, it maybe cause other bolts out of position.

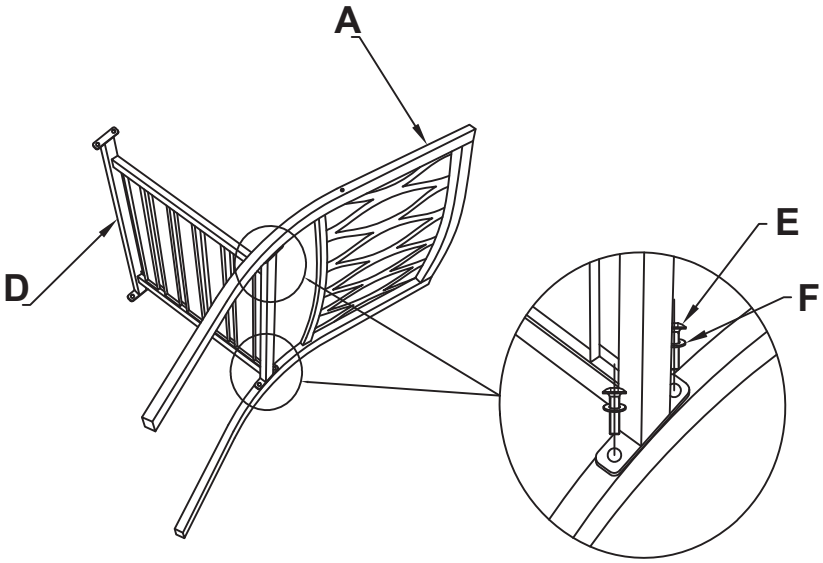

STEP 1

Assemble seat (D) to back (A) with 4 washers (F) and 4 bolts (E). Do not screw down.

ASSEMBLY INSTRUCTIONS

CAVEAT

Note: Please do not tighten any bolt until all bolts have been put into right place.
If you tighten one bolt, it maybe cause other bolts out of position.

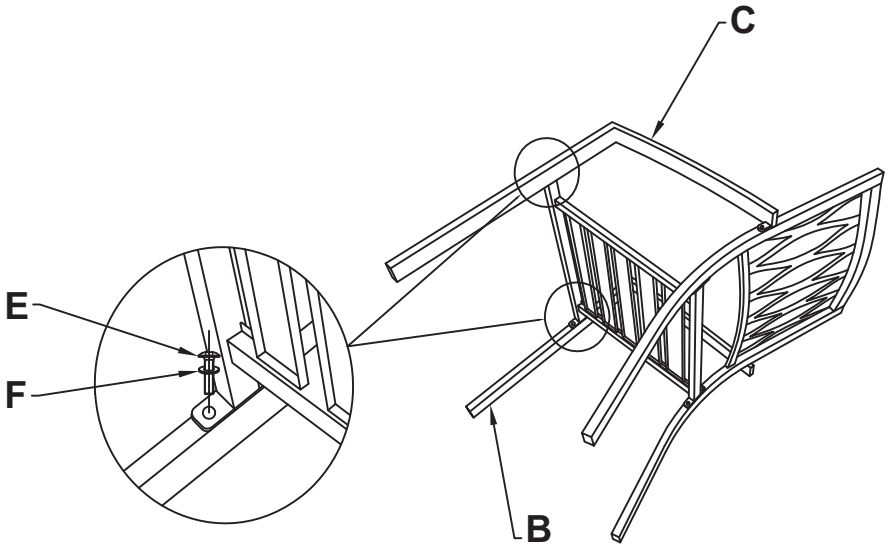

STEP 2

Assemble seat (D) to arms (B/C) with 4 washers (F) and 4 bolts (E). Do not screw down.

ASSEMBLY INSTRUCTIONS

CAVEAT

Note: Please do not tighten any bolt until all bolts have been put into right place.
If you tighten one bolt, it maybe cause other bolts out of position.

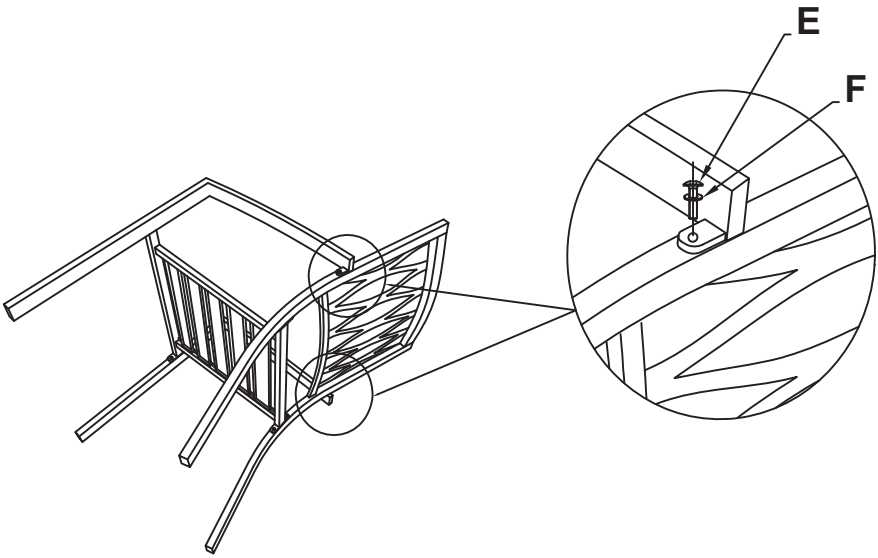

STEP 3

Assemble arms (B/C) to back (A) with 2 washers (F) and 2 bolts (E). Do not screw down.
Tighten all screws.

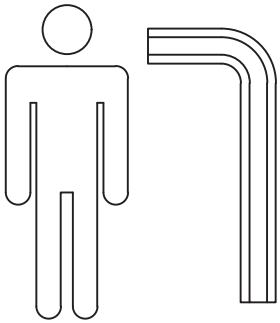

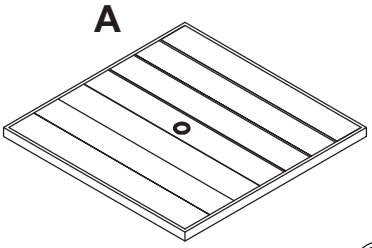

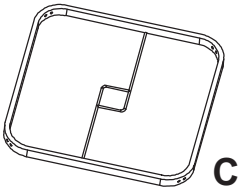

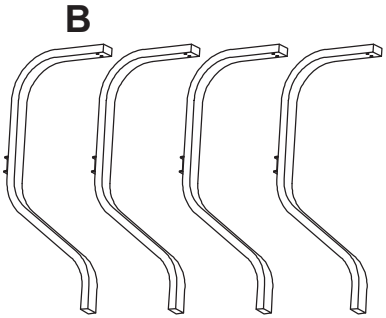

Part Number	Images and Sizes	Qty.
A		1
B		4
C		1
D	M6*25	8
E	M6*35	8

ASSEMBLY INSTRUCTIONS

CAVEAT

Note: Please do not tighten any bolt until all bolts have been put into right place.
If you tighten one bolt, it maybe cause other bolts out of position.

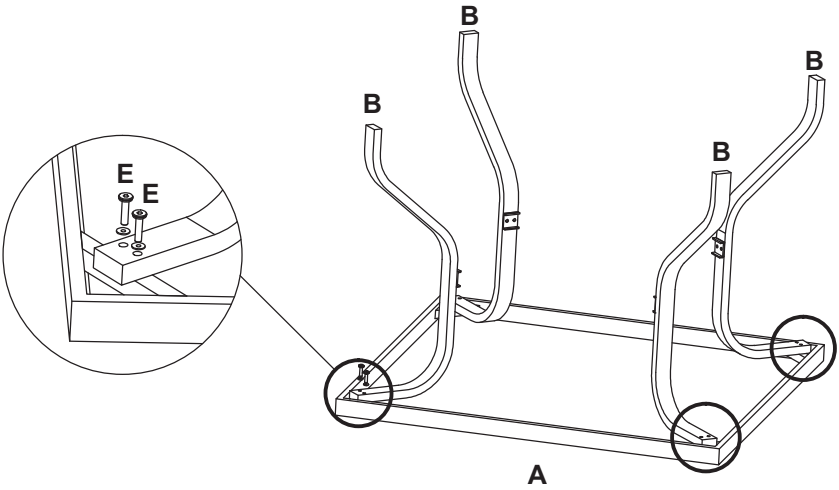

STEP 1

Attach 4 legs (B) to table top (A) using 8 bolts and washers (E). Do not screw down.

ASSEMBLY INSTRUCTIONS

CAVEAT

Note: Please do not tighten any bolt until all bolts have been put into right place.
If you tighten one bolt, it maybe cause other bolts out of position.

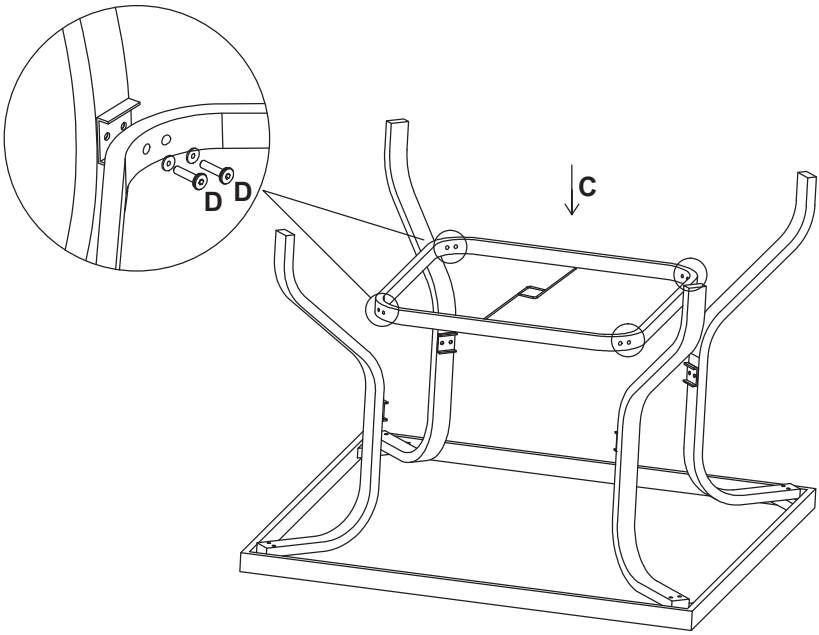

STEP 2

Attach fix ring (C) together using 8 bolts and washers (D), Do not screw down.
Upon completion of full assembly and bolted up-all screws can be tightened down.

CARE AND MAINTENANCE

Follow the instruction for the material of your special product to make sure that it stays in the best shape for as long as possible. The information below is only intended as a general guideline. For more information, please contact us.

• Only need to rinse it thoroughly with clean water to wash away dirt and grime. Never use abrasive cleansers on the furniture, since it can attack the surfaces and leave behind scratch marks.

• For the stubborn grime and stains, just use a soft sponge and mild soapy water and then dry it with a cloth or paper towel.

• Check the stability of the screws, nuts and nut caps prior to each use. Tighten up them after one to two month's use whenever required.

• Avoid improper use, and be careful not to scratch or damage the surface with sharp objects.

• When you move your furniture, make sure you lift it rather than pulling or pushing it to avoid damaging the floor, legs and mounting.

CUSTOMER SERVICE

Thanks for purchasing this NUUGARDEN furniture. We are here to help you maximize your enjoyment and appreciation of it.

Please do not hesitate to contact our customer service when you have any questions regarding assembly or accessories.

Add: 6366 Corley Road, Norcross, GA 30071.

Tel: (800) 257-7108

Web: http://www.nuugarden.com

E-mail: service@nuugarden.com

Service time: Mon-Fri, 8:30 AM-5:30 PM, EST

NUUGARDEN USA

NUU GARDEN®

ENJOY LIFE · SHARE HAPPINESS

Nuu Garden Corp.

Add: 6366 Corley Road, Norcross GA 30071.
Tel: (800) 257-7108
Web: http://www.nuugarden.com
E-mail: service@nuugarden.com