3/8" BELT SANDER

EXPLODED VIEW

SP-1370A

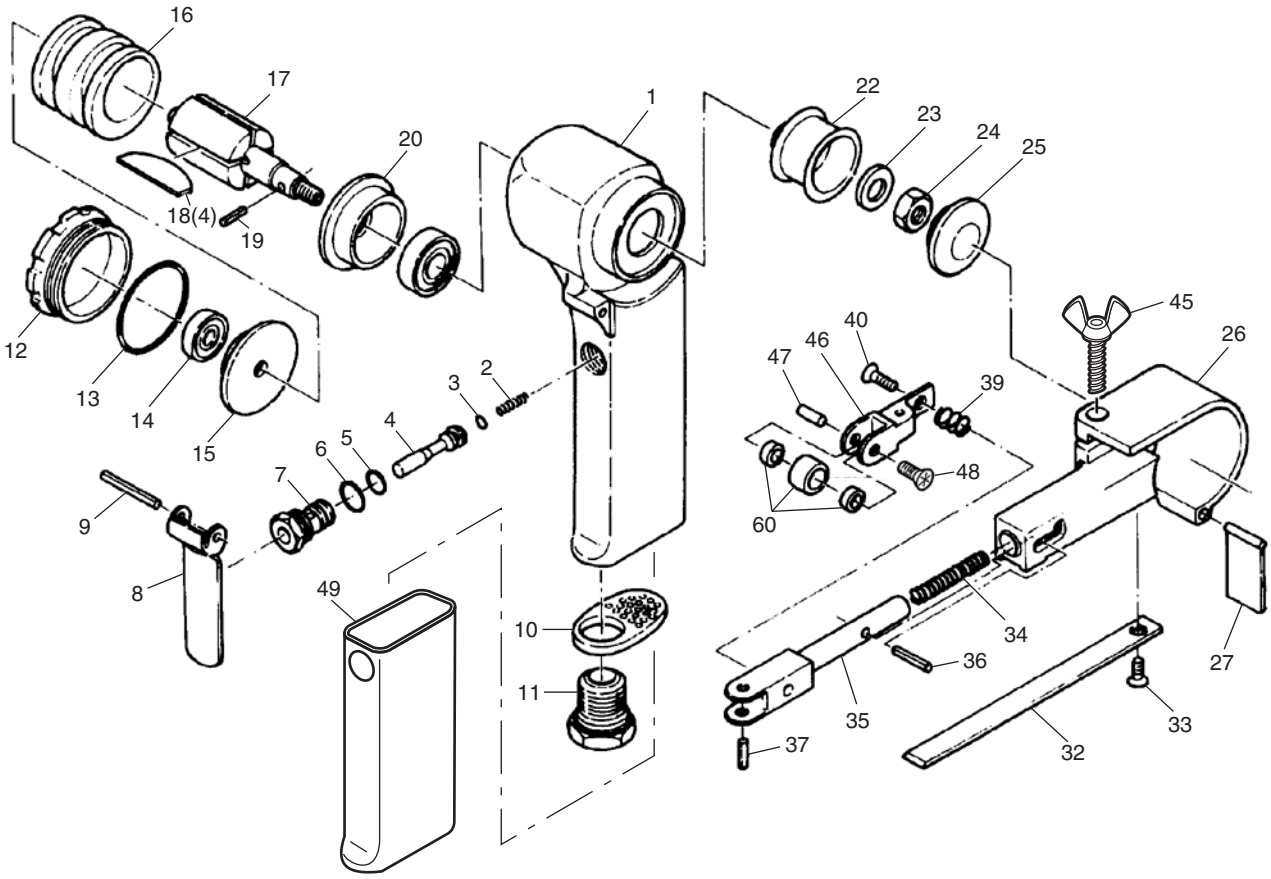

PARTS LIST

Index No.	Parts No.	Description	Qty. Per tool
1	37001	Motor Housing	1
2	37002	Valve Spring	1
3	37003	O-Ring	1
4	37004	Valve Stem	1
5	37005	O-Ring	1
6	37006	O-Ring	1
7	37007	Valve Bushing	1
8	37008	Throttle Lever	1
9	37009	Lever Pin	1
10	37010	Deflector	1
11	37011	Inlet Bushing	1
12	37012	Motor Nut	1
13	37013	O-Ring	1
14	37014	Ball Bearing	1
15	37015	Rear End Plate	1
16	37016	Cylinder	1
17	37017	Rotor	1
18	37018	Rotor Blade	4
19	37019	Roll Pin	1
20	37020	Front End Plate	1
21	37021	Ball Bearing	1
22	37022	Drive Pulley	1
23	37023	Washer	1
24	37024	Lock Nut	1
25	37025	Pulley Cap	1
26	37026	Wheel Cover	1
27	37027	Apron	1
32	37032	Shoe	1
33	37033	Screw	1

Index No.	Parts No.	Description	Qty. Per tool
34	37034	Tension Spring	1
35	37035	Tension Arm	1
36	37036	Roll Pin	1
37	37037	Roll Pin	1
39	37039	Adjust Spring	1
40	37040	Screw	1
45	37045	Adjust Screw	1
46	370A46	Adjust Arm	1
47	370A47	Pulley Pin	1
48	370A48	Screw	1
49	370A49	Handle Cover	1
60	37060	Idle Pulley w/Bearings	1

The types and specifications may be changed without notice.