DR® FRONT TINE ROTOTILLER
SAFETY & OPERATING INSTRUCTIONS

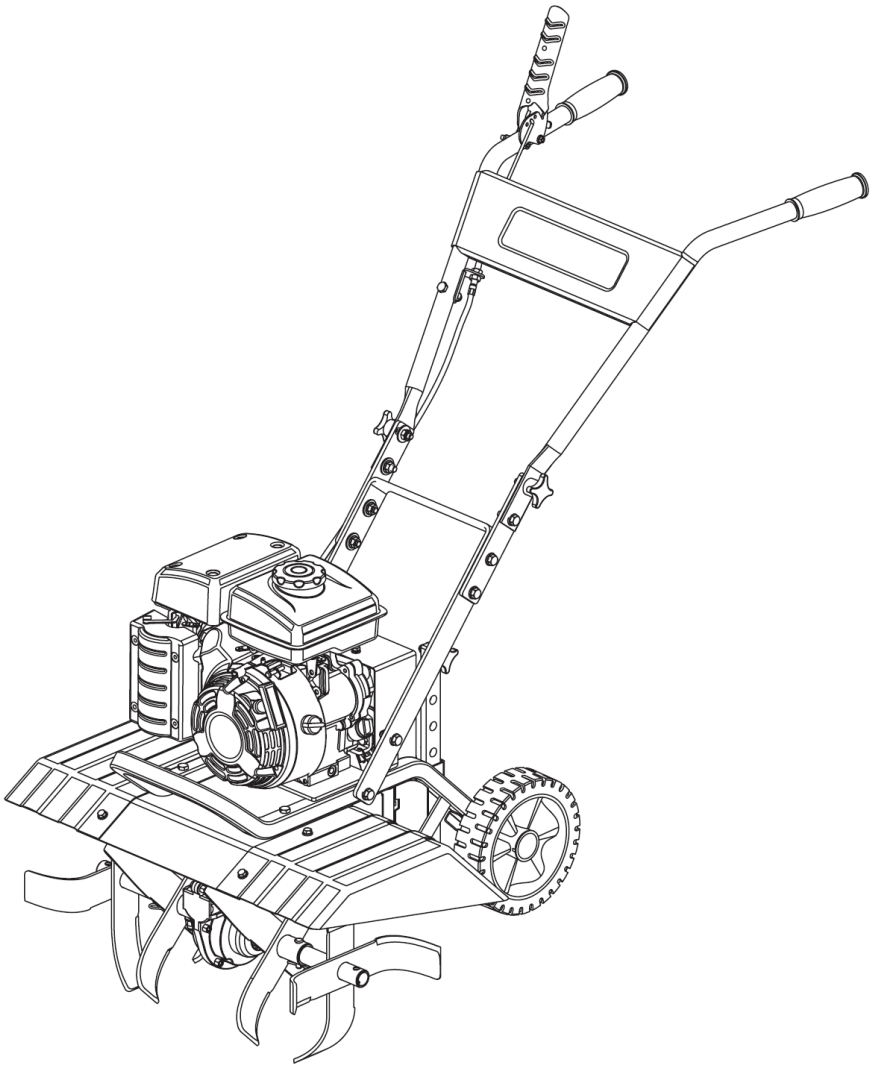

Model:
Premier FRT

Serial No. _____

Order No. _____

DR® Power Equipment
Toll-free phone: 1-800-DR-OWNER (376-9637)
Web site: www.DRpower.com

⚠ WARNING

Read and understand this manual and all instructions before operating this DR FRONT TINE ROTOTILLER.

Table of Contents

Chapter 1: General Safety Rules 3
Chapter 2: Setting Up Your DR FRONT TINE ROTOTILLER 7
Chapter 3: Operating Your DR FRONT TINE TILLER 12
Chapter 4: Maintaining Your DR FRONT TINE TILLER 14
Chapter 5: Troubleshooting 18
Chapter 6: Parts Lists, Schematic Diagrams and Warranty 20

Conventions used in this manual

⚠ WARNING

This indicates a hazardous situation, which, if not avoided, ***could*** result in death or serious injury.

⚠ CAUTION

This indicates a hazardous situation, which, if not avoided, ***could*** result in minor or moderate injury.

NOTICE

This information is important in the proper use of your machine. Failure to follow this instruction could result in damage to your machine or property.

Figure 1

Serial Number and Order Number

A Serial Number is used to identify your machine. The number is located on the Serial Number Label attached to the chassis of your machine (***Figure 1***). For your convenience and ready reference, enter the Identification number in the space provided on the front cover of this manual. An Order Number is used to check and maintain your order history. The number is located on your packing slip. For your convenience and ready reference, enter the order number in the space provided on the front cover of this manual.

Additional Information and Potential Changes

DR Power Equipment reserves the right to discontinue, change, and improve its products at any time without notice or obligation to the purchaser. The descriptions and specifications contained in this manual were in effect at printing. Equipment described within this manual may be optional. Some illustrations may not be applicable to your machine.

California Proposition 65

⚠ WARNING
CANCER AND REPRODUCTIVE HARM - www.P65Warnings.ca.gov.

WARNING

Read this safety & operating Instructions manual before you use the DR FRONT TINE ROTOTILLER. Become familiar with the operation and service recommendations to ensure the best performance from your machine. If you have any questions or need assistance, please contact us at www.DRpower.com or call toll-free 1-800-DR-OWNER (376-9637) and one of our Technical Support Representatives will be happy to help you.

Labels

Your DR FRONT TINE ROTOTILLER carries prominent labels as reminders for its proper and safe use. Shown below are copies of the Safety and Information Labels that appear on the equipment. Take a moment to study them and make a note of their location on your DR FRONT TINE ROTOTILLER as you assemble and before you operate the machine. Replace damaged or missing safety and information labels immediately.

#406621

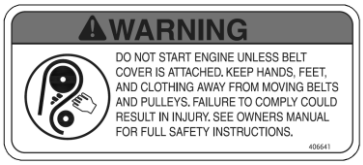

#406641

#A0001327658

#A0001327660

#A0000986520

#406681

Protecting Yourself and Those Around You

WARNING

The DR FRONT TINE ROTOTILLER is a high-powered machine with fast moving parts operating at high speeds. You must operate this machine safely. Unsafe operation can create hazards for you, as well as anyone else in the work area. Use proper clothing and safety gear when operating this machine to prevent or minimize the risk of severe injury. Always take the following precautions when operating the DR FRONT TINE ROTOTILLER:

- Always wear protective goggles or safety glasses with side shields to protect your eyes from possible objects thrown from the machine.
- We recommend wearing safety shoes when using this machine. Wear shoes with non-slip treads to improve footing on slippery surfaces. Do not use the machine wearing open sandals or while barefoot.
- Do not wear loose clothing or jewelry, which can catch on the machine's moving parts.
- We recommend wearing long pants and gloves while using this machine. Be sure the gloves fit properly and do not have loose cuffs or drawstrings.
- We recommend the use of ear protectors or ear plugs rated for at least 20 dba to protect your hearing.
- Allow only responsible individuals who are familiar with these general safety rules and operating instructions to use your DR FRONT TINE ROTOTILLER. Never allow people who are unfamiliar with these rules and instructions to use your machine.

Protecting Yourself and Those Around You (continued)

⚠ WARNING

- Never place your hands, feet, or any part of your body near or under any moving part while the DR FRONT TINE ROTOTILLER Engine is running.
- Keep bystanders away from your work area at all times. To be safe, do not operate the DR FRONT TINE ROTOTILLER near children or pets, and never allow children to operate the machine. Stop the DR FRONT TINE ROTOTILLER Engine when another person or pet approaches.
- Do not touch the Muffler and Engine when the machine is in use as they become very hot and can cause severe burns.
- Clear the work area of objects that might jam or wrap around the tines such as glass, large sticks, stones, metal objects, wire, rope, and string-like materials. Use on these objects could damage the DR FRONT TINE ROTOTILLER and/or cause injury.
- Do not use this machine around large roots and surface rocks that you cannot remove.
- Do not use this machine around underground pipes and wiring.
- Never engage the Tines when they are in the ground. If the DR FRONT TINE ROTOTILLER Engine should stall, raise the Tines out of the soil and disengage them.
- Never, under any conditions, remove, bend, cut, fit, weld, or otherwise alter standard parts on the DR FRONT TINE ROTOTILLER. This includes all shields and guards. Modifications to your machine could cause personal injuries and property damage and will void your warranty.

Slope Operation

⚠ WARNING

Use of machinery on slopes is a major factor related to accidents, which can result in severe personal injury. Use of machinery on slopes requires caution. If you feel uneasy using the DR FRONT TINE ROTOTILLER on a slope, do not operate it. Always take the following precautions when using this machine on slopes:

Always:

- Exercise extreme caution when changing direction on slopes.
- Watch for holes, ruts, and bumps on the ground.
- Operate machine across slopes, never up and down the slope.

Never:

- Never operate near drop-offs, ditches, or embankments; you could lose control of your Tow Vehicle and/or the DR FRONT TINE ROTOTILLER.
- Never operate on slopes greater than 15 degrees, or on any excessively steep slope.
- Never operate on wet, or slippery slopes. Reduced traction could result in tipping over your Tow Vehicle and/or the DR FRONT TINE ROTOTILLER.

Safety for Children

⚠ WARNING

Tragic accidents can occur if the operator is not alert to the presence of children. Children can be attracted to the DR FRONT TINE ROTOTILLER and the tilling activity. Never assume that children will remain where you last saw them.

- Keep children out of the work area and under the watchful care of a responsible adult.
- Be alert and always turn off your Tiller Engine if children enter the work area.
- Before, and while moving backwards, look behind, and down for small children.
- Never allow children to operate the DR FRONT TINE ROTOTILLER.
- Use extra care when approaching blind corners, shrubs, trees, or other objects that may obscure your vision.

Safety with Gasoline-Powered Machines

⚠ WARNING

Gasoline is a highly flammable liquid. Gasoline also gives off flammable vapor that can be easily ignited and cause a fire or explosion. Never overlook the hazards of gasoline and always follow these precautions:

- Never run the DR FRONT TINE ROTOTILLER Engine in an enclosed area or without proper ventilation as the exhaust from the Engine contains carbon monoxide, which is an odorless, tasteless, and deadly poisonous gas.
- Store all fuel and oil in containers specifically designed and approved for this purpose and keep away from heat, open flame, and out of the reach of children.
- Fill the gasoline tank outdoors with the Engine off and allow the Engine to cool completely. Do not handle gasoline if you or anyone nearby is smoking, or if you are near anything that could cause it to ignite or explode. Replace the Fuel Tank and Fuel Container Caps securely.
- If you spill gasoline, do not attempt to start the Engine. Move the machine away from the area of the spill and avoid creating any source of ignition until the gas vapors have dissipated. Wipe up any spilled fuel to prevent a fire hazard and properly dispose of the waste.
- Allow the DR FRONT TINE ROTOTILLER Engine to cool completely before storing in any enclosure. Never store the machine with gas in the Tank or with gas in a Fuel Container near an open flame or spark such as a water heater.
- Never make adjustments or repairs with the Engine running. Before making an adjustment or repair, shut off the DR FRONT TINE ROTOTILLER Engine, wait five minutes to cool, then disconnect the Spark Plug Wire and keep the Wire away from the Spark Plug to prevent accidental starting.
- Never check for an ignition spark with the Spark Plug or Spark Plug Wire removed. Always use an approved Spark Tester.
- Never tamper with safety devices. Regularly check their proper operation.
- Never change the Engine Governor settings or modify the Engine speed. Modifications will void your warranty.
- To reduce fire hazard, keep the Engine and Muffler area free of debris build-up such as leaves, grass, oil, grease, or any other combustible material. Clean the Engine area after each use.
- Never operate the Engine without the Muffler. Inspect the Muffler periodically and replace if necessary. If the Engine is equipped with a Muffler Deflector, inspect it periodically and replace if necessary.
- Never operate the Engine with the Air Cleaner or Cover over the Carburetor Air Intake removed, except for adjustment. Removal of such parts could create a fire hazard. Do not use flammable solutions to clean the Air Filter.
- Always check Fuel Lines and Fittings frequently for cracks or leaks, replace if necessary.
- Replace rubber Fuel Lines and Grommets when worn or damaged, but do not use over five years.

General Safety

WARNING

Safe operation of the DR FRONT TINE ROTOTILLER is necessary to prevent or minimize the risk of ***death or serious injury***. Unsafe operation can create a number of hazards for you. Always take the following precautions when operating this machine:

- The DR FRONT TINE ROTOTILLER is a powerful tool and not a plaything. When using this machine, exercise extreme caution at all times. The design of this machine is to till soil. Do not use it for any other purpose.
- The operator or user of the DR FRONT TINE ROTOTILLER is responsible for accidents or hazards occurring to other people, their property, and themselves.
- Know how to quickly stop the DR FRONT TINE ROTOTILLER. See page 12.
- Never allow people or pets to ride on this machine.
- If the machine should make an unusual noise or vibration, shut off the Tow Vehicle and the DR FRONT TINE ROTOTILLER Engines. Vibration is generally a warning of trouble. Wait five (5) minutes for the DR FRONT TINE ROTOTILLER Engine to cool. Disconnect the Spark Plug Wire and then inspect the machine for clogging, damaged Tines, or loose Engine mounting Bolts. Clear any obstructions and repair and/or replace damaged parts.
- Always keep the machine in good safe operating condition. Always make certain Nuts and Bolts are tight and always use the supplied self-locking hardware. DO NOT USE SUBSTITUTE HARDWARE.
- Always shut off the Tow Vehicle and DR FRONT TINE ROTOTILLER Engine, wait five (5) minutes to cool, and disconnect the Spark Plug Wire before attempting to clear any obstructions.
- Use the DR FRONT TINE ROTOTILLER only in daylight and give complete and undivided attention to the job at hand.
- Do not hurry or take things for granted when using the DR FRONT TINE ROTOTILLER. When in doubt about the machine or your surroundings; stop the machine and take time to look things over.
- Exercise extreme caution when on or crossing drives, walks, or roads. Stay alert for hidden hazards or traffic.
- Never leave the DR FRONT TINE ROTOTILLER unattended with the Engine running. If leaving the machine, shift the Tow Vehicle into neutral, set the Vehicle Parking Brake, turn off the Vehicle Engine and remove Key; raise the Tines of the Tiller and disengage the Tine Drive then turn off the Tiller Engine.
- Prior to transportation to and from the work area, disengage the Tiller Tine Drive, stop the Tiller Engine, and raise the Tines.
- Do not operate the machine when under the influence of alcohol, drugs, or medication.
- See manufacturer's instructions for proper operation and installation of accessories. Only use accessories approved by DR Power Equipment.

A Note to All Users

No list of warnings and cautions can be all-inclusive. If situations occur that are not covered by this manual, the operator must apply common sense and operate the DR FRONT TINE ROTOTILLER in a safe manner. Visit our website at www.DRpower.com or call 1-800-DR-OWNER (376-9637) for assistance.

Under California law, and the laws of some other states, you are not permitted to operate an internal combustion Engine using hydrocarbon fuels without an Engine Spark Arrester. This also applies to operation on US Forest Lands. All DR FRONT TINE ROTOTILLERs shipped to California and Washington State are provided with Spark Arresters. Failure of the owner/operator to maintain this equipment in compliance with state regulations is a misdemeanor under California law and may be in violation of other state and/or federal regulations. Contact your local Fire Marshal, Forest Service, State Park Association, or the appropriate state organization for specific information in your area.

Chapter 2: Setting Up Your DR FRONT TINE ROTOTILLER

It may be helpful to familiarize yourself with the Controls and Features on your new machine by reviewing ***Figure 2*** before beginning the steps outlined in this chapter. For technical assistance, please visit our website at **www.DRpower.com**.

DR FRONT TINE ROTOTILLER Controls and Features

Note: The model shown in Figure 2 may look slightly different from your machine.

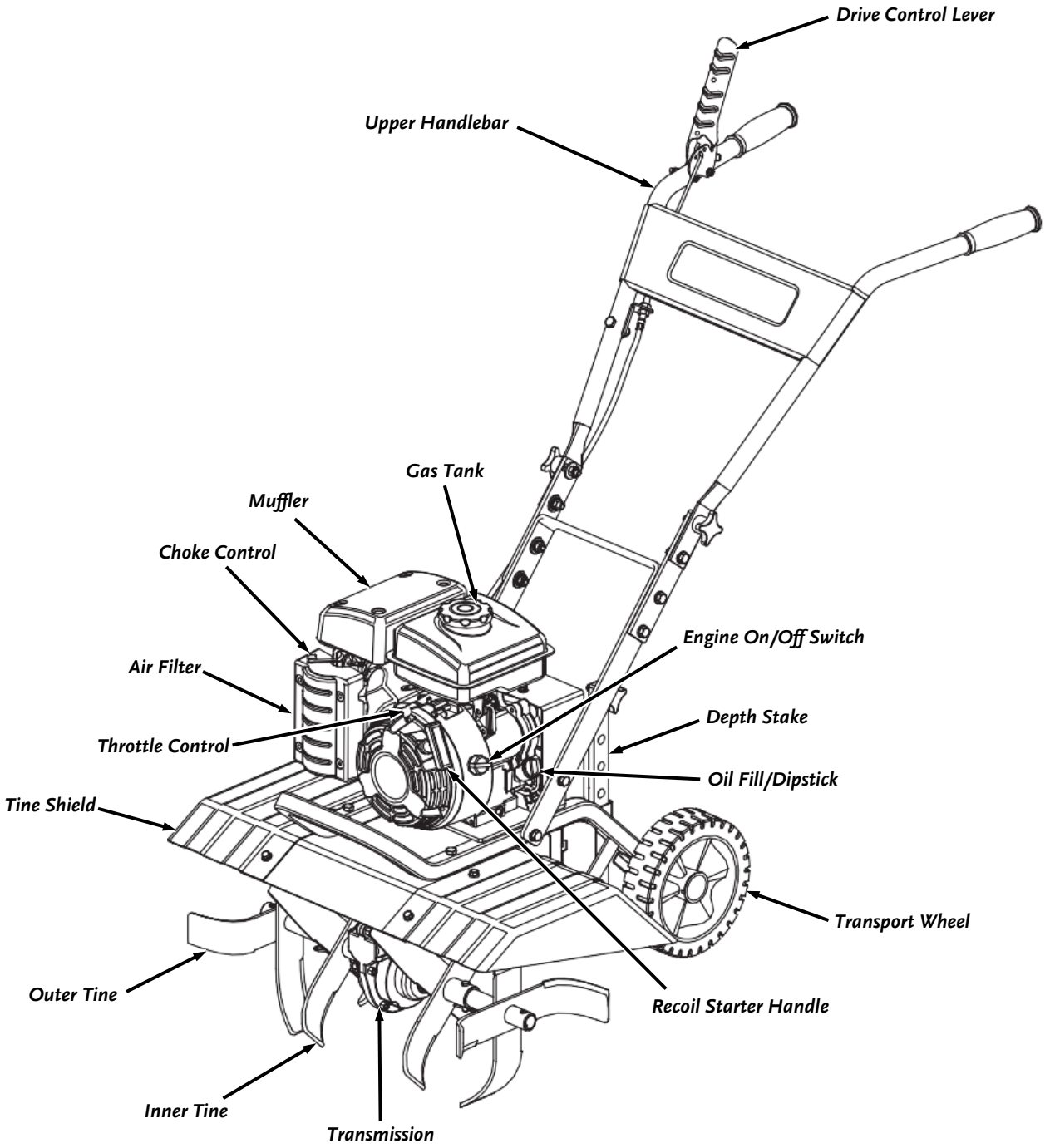

Figure 2

DR FRONT TINE ROTOTILLER Specification Sheet

Engine	DR 4-Cycle OHV
Displacement	98 cc
Engine Speed	3,600 rpm
Torque	3.33 ft-lbs (4.5Nm)
Fuel Type and Capacity	Unleaded Gasoline, 1.69 qt (1.6L)
Oil Capacity	12 oz (350mL)
Spark Plug Type	Torch E6TC/E6RTC, Champion RN9YC, NGK BPR6ES, Bosh WR6DC
Frame and Handlebars	Powder Coated Steel
Tine rpm	180
Transmission	Worm Gear and Belt
Tire Size	8" (20.3cm)
Tilling Width	11" –21" (28cm-53cm)
Tilling Depth	2" –11" (5cm-28cm)
Dimensions (L × W × H)	48" × 24" × 40" (122cm x 61cm x 102cm)
Machine Weight	95 lbs (43.1kg)

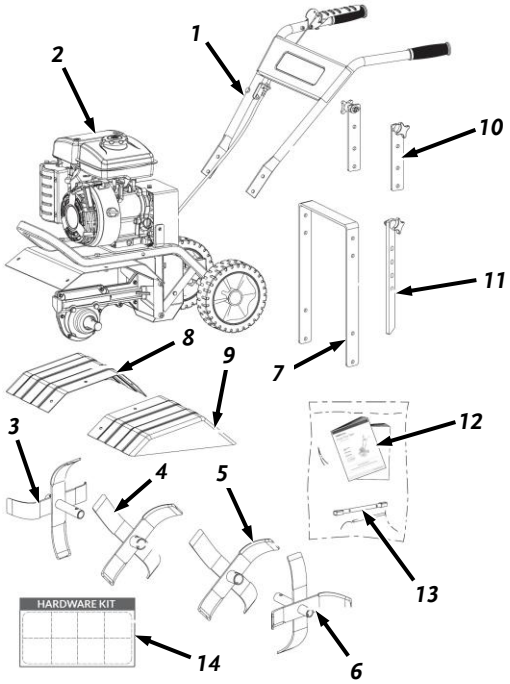

Figure 3

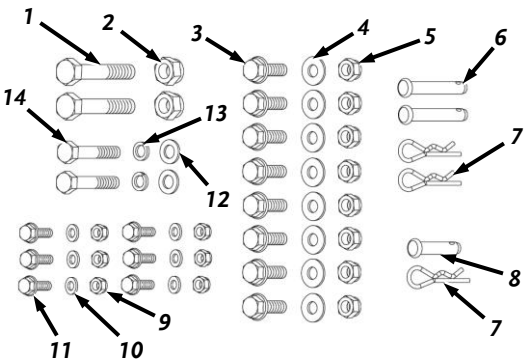

Figure 4

Shipping Contents

Main Parts (Figure 3):

1 Upper Handlebar
2 Main Machine
3 Outer Tine - Right
4 Inner Tine - Right
5 Inner Tine - Left
6 Outer Tine - Left
7 Lower Handlebar
8 Tine Shield - Right
9 Tine Shield - Left
10 Handlebar Adjusting Plates (1 pair)
11 Depth Stake
12 Operator's Manual & Engine Manual
13 Tools for Spark Plug Assembly
14 Hardware Kit (Figure 4 and list below)

Parts Supplied in Hardware Kit (Figure 4):

Item#	Part#	Description	Qty
1	371321	Hex Bolt-M10 X 50	2
2	A0000953197	Nut-M10 Nylon Lock	2
3	A0000947585	Hex Bolt-M8 X 25 Flange	8
4	302471	Washer-M8	8
5	333421	Nut-Nylon Lock Flanged M8-1.25 Cl8 Zp	8
6	A0000953216	Pin-8 X 45	2
7	A0000953211	Cotter Pin-2.5mm Dia X 45	3
8	A0000953210	Pin-8 X 32	1
9	A0000947584	Nut-Nylon Lock M6	6
10	A0000940904	Washer-M6 Flat	6
11	A0000953209	Hex Bolt-M6 X 16	6
12	A0000947682	Washer-M8 Flat	2
13	A0000940903	Washer-M8 Split Lock	2
14	A0000947598	Hex Bolt-M8 X 45	2

Assembling the Machine

Tools Needed:

- Two 16mm Wrenches
- Two 13mm Wrenches
- Two 10mm Wrenches

1. Install the two Inner Tines onto the Gearbox Shafts with two M10×50 Hex Bolts and M10 Nylon Lock Nuts using two 16mm Wrenches (***Figure 5***).
2. Secure the Lower Handlebar (use lower holes) to the Support Bracket with M8×45 Hex Bolts, M8 Spring Washers, and M8 Flat Washers using a 13mm Wrench (***Figure 6***).
3. Secure the Lower Handlebar (next set of holes) to the Support Bracket with M8×25 Bolts, M8 Flat Washers, and M8 Lock Nuts using two 13mm Wrenches.
4. Install the two Handlebar Adjusting Plates to the Lower Handlebar with four M8×25 Bolts, M8 Washers, and M8 Nuts using two 13mm Wrenches (***Figure 7***).
5. Remove the two Adjusting Hand Knobs, Flat Washers and Nuts from the Handlebar Adjusting Plates (***Figure 8***).
6. Secure the lower holes of the Upper Handlebar to the Handlebar Adjusting Plates (only hand tight) with two M8×25 Bolts, M8 Washers, and M8 Nuts.
7. Reinstall the Adjusting Hand Knobs into one of three upper holes and secure with M8 Washer and M8 Nuts using a 13mm Wrench.
8. Tighten the lower two M8 nuts installed in step 6 using two 13mm Wrenches.

Note: *The handlebars can be adjusted to adapt to the user and working conditions. The procedure is explained in the Operation section.*

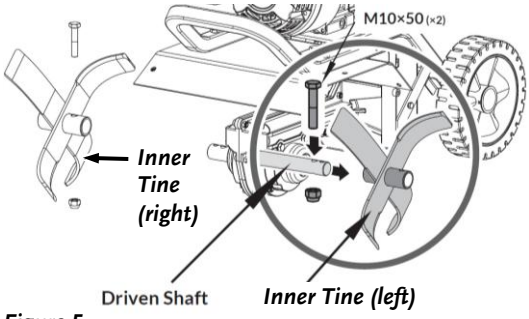

Figure 5

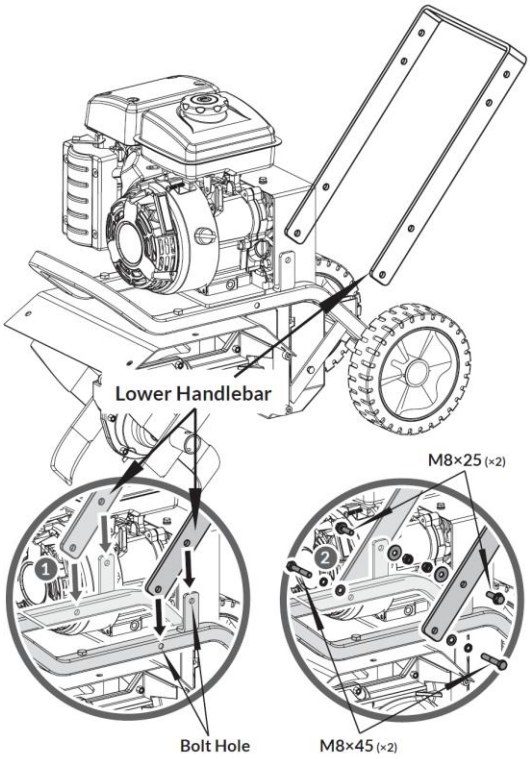

Figure 6

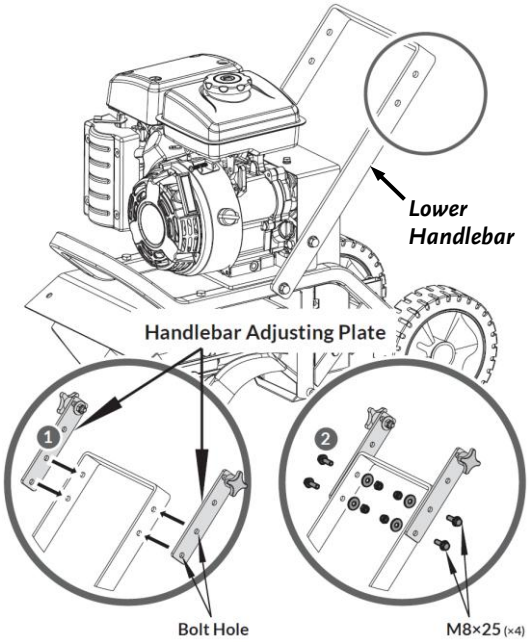

Figure 7

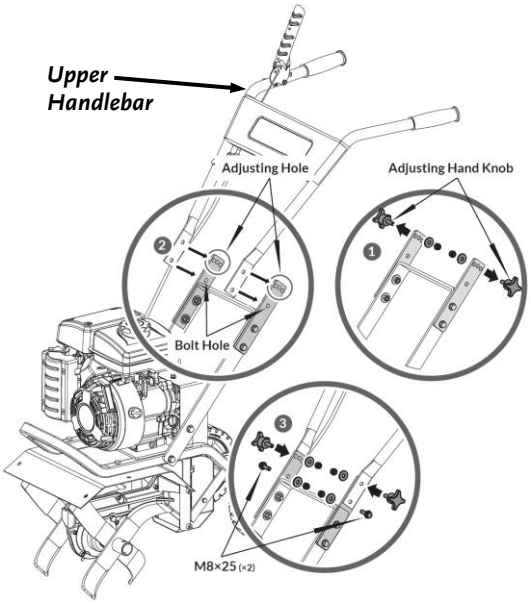

Figure 8

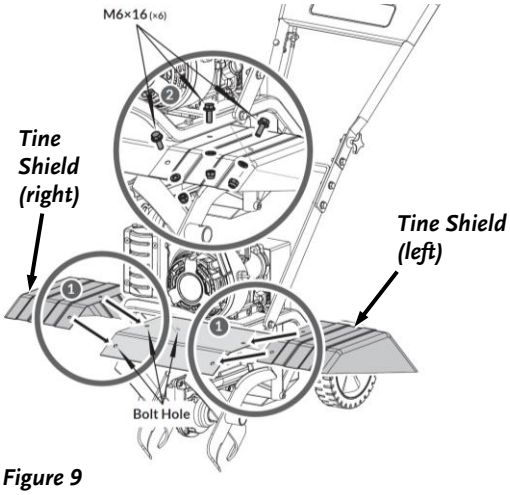

Figure 9

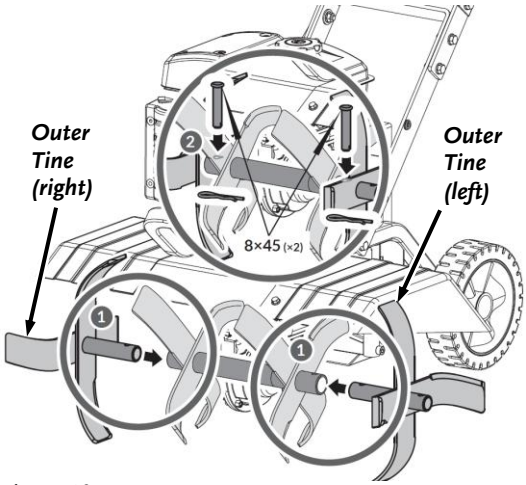

Figure 10

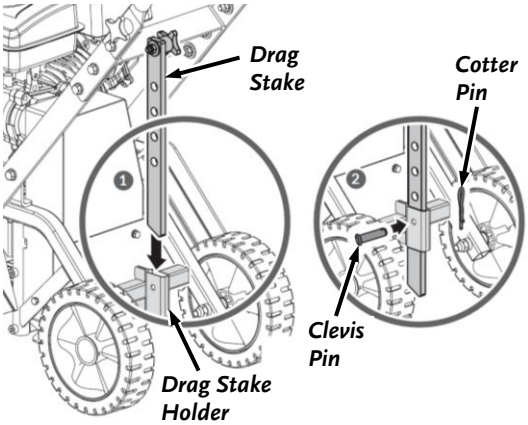

Figure 11

9. Install the Tine Shields with six M6×16 Bolts, Flat Washers, and M6 Lock Nuts using two 10mm Wrenches (***Figure 9***).
10. Position the two Outer Tines into the Inner Tines and align the holes (***Figure 10***).
11. Secure the Outer Tines to the Inner Tines with the 8 X 45 Pins and 2.5mm Dia X 45 Cotter Pins.

Drag Stake

1. Insert the Drag Stake into the Drag Stake Holder Tube. And secure it at the lowest Depth Stake hole location with 8×32 Pin and Cotter Pin (***Figure 11***).

Note: *The Depth Stake can be adjusted to control tilling depth as needed. The procedure is explained in the Operation section.*

Adding the Engine Oil and Gasoline

Engine Fluid Requirements	
Engine Oil 12oz. (350ml)	⇒ 0-100 °F (-17-38°C); SAE 10W-30 ⇒ 50-100 °F (10-38 °C); SAE 30 ⇒ For Service SF, SG, SH, SJ or higher
Gasoline Tank 1.69qt. (1.6L)	⇒ Unleaded Gas (87 Octane minimum) ⇒ Up to 10% ethanol (gasohol) is acceptable ⇒ Non-ethanol premium fuel recommended ⇒ DO NOT USE E85 ⇒ DO NOT use gas oil mixture ⇒ DO NOT modify engine to run on alternate fuels ⇒ Add Stabilizer to fuel prior to storage

⚠ WARNING

SKIN IRRITATION: Avoid prolonged or repeated contact with motor oil (especially used motor oil). Used motor oil has been shown to cause skin cancer in laboratory animals. Thoroughly wash exposed areas with soap and water.

NOTICE

- You must add Oil before starting the Engine. This machine is shipped without Oil. Traces of Oil may be in the reservoir from factory testing, but you must add Oil before starting the Engine. Fill the reservoir slowly, checking the level frequently, to avoid overfilling.
- To get an accurate reading when checking the oil level:
  - The machine should be on a level surface.
  - The dipstick SHOULD NOT be screwed down to ensure an accurate oil level reading.

Tools and Supplies needed:

- Small Funnel
- Clean Rags

1. Place the machine on a level surface and clean the Oil and Fuel fill areas.

2. Remove the Oil Fill/Dipstick and wipe the Oil off with a clean rag (***Figure 12***).
3. Initially add 10 oz. (.29L) of SAE 30 High Detergent oil, recommended by the Engine Manufacturer, and wait one minute for the oil to settle.
2. Install the Dipstick but DO NOT screw it in (***Figure 13***). Remove the Dipstick and check the Oil level. Continue adding Oil as needed, until the Oil reaches the full mark (Max Upper Level). Be careful not to overfill.
3. Install and screw in the Dipstick when finished.
4. Fill the Gas Tank with fresh, unleaded gas (with a minimum of 87 Octane), to approximately 1" below the top of the Fill Neck to allow for Fuel expansion (***Figure 14***). Be careful not to overfill and reinstall the Cap before starting the Engine. See your Engine Owner's Manual for more information.

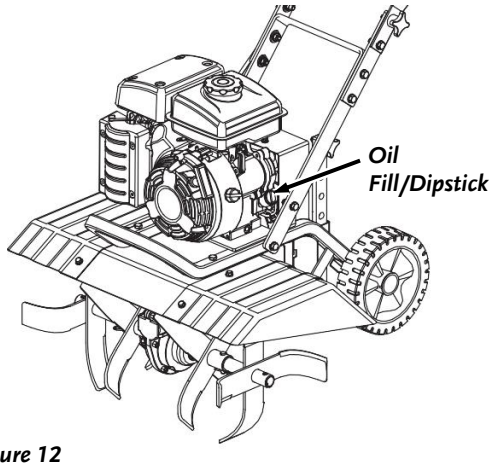

Figure 12

⚠ WARNING

FIRE AND EXPLOSION RISK: Keep spark and flame away from liquid and vapor. Do not smoke while using. Doing so could result in death, serious injury, or equipment damage.

Note: *To refill the Gas Tank, turn the Engine OFF, and let the Engine cool at least five minutes before removing the Gas Fill Cap.*

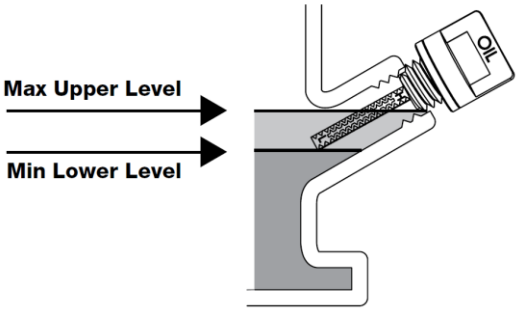

Figure 13

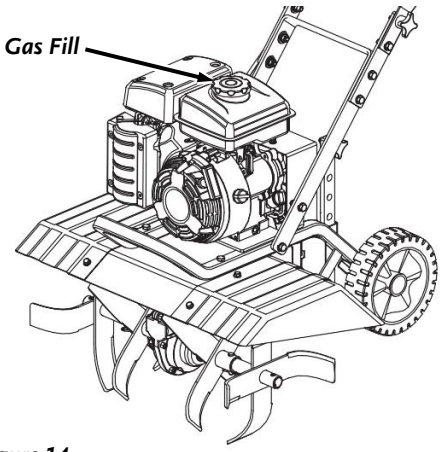

Figure 14

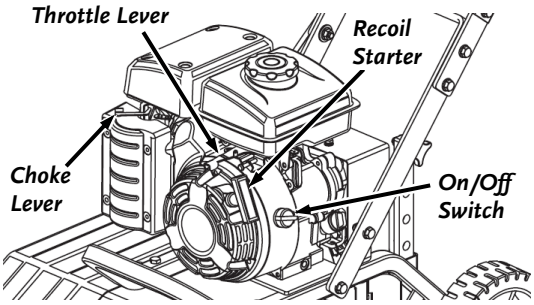

Figure 15

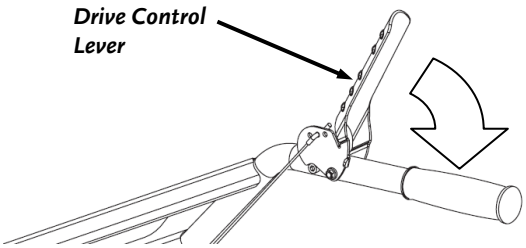

Figure 16

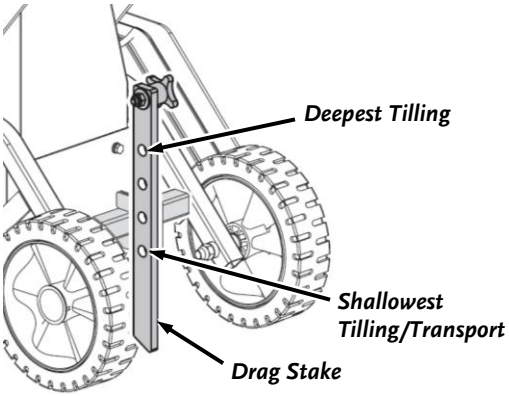

Figure 17

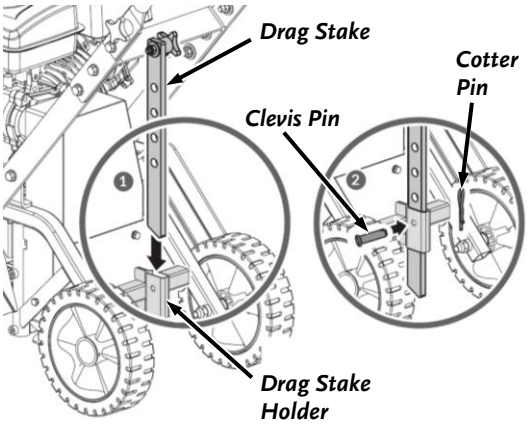

Figure 18

⚠ WARNING

Read all information and Warnings in Chapter 1 before operating the DR Front Tine Rototiller.

Before Starting the Engine

1. Check the Engine Oil level every time before you use the machine (***Figure 12 and 13*** on page 11).
2. Check the gas level (***Figure 14*** on page 12).

Starting the Engine

1. Move the engine On/Off switch to the "ON" position (***Figure 15***).
2. Move the choke lever to the "CHOKE" position (leave the Choke "RUN" position if the Engine is already warm)
3. Move the Throttle from the "STOP" position to about 1/4 of the way to the fast (Rabbit) position.
4. Grasp the Recoil Starter Handle and slowly pull until you feel resistance. Let the Cord retract a little bit, and then pull the Cord rapidly to start the Engine.
5. When the Engine starts, move the Throttle to the Fast (Rabbit) position.

Stopping the Engine

To stop the engine in an emergency, simply turn the engine switch to the "OFF" position. Under normal conditions, use the following procedure:

1. Move the throttle lever to the slow (Turtle) position (***Figure 15***).
2. Let the engine idle for one or two minutes.
3. Turn the engine On/Off switch to the "OFF" position.
4. Turn the fuel valve lever to the "OFF" position.

Tine Operation

1. Pull the drive control lever against the Handlebar to engage the tines (***Figure 16***).
2. Release the drive control lever to disengage the tines.

Drag Stake

The Drag Stake can be raised or lowered to four different settings allowing more versatile tilling and cultivating, or to more easily transport your tiller (***Figure 17***).

1. Remove the Cotter Pin and Clevis Pin (***Figure 18***).
2. Align the holes in the Drag Stake and Drag Stake Holder as desired and reinstall the Clevis Pin and Cotter Pin.

- The highest hole location is for deepest tilling.
- The lowest hole location is for shallowest tilling and transport.

Handlebar Height Adjustment

Tools needed:

- Two 13mm Wrenches

1. Loosen the two bottom Bolts of the Upper Handlebar using two 13mm Wrenches (***Figure 19***).
2. Remove the Locknuts, Flat washers, and Hand Knobs from the top holes of the Upper Handlebar using a 13mm Wrench.

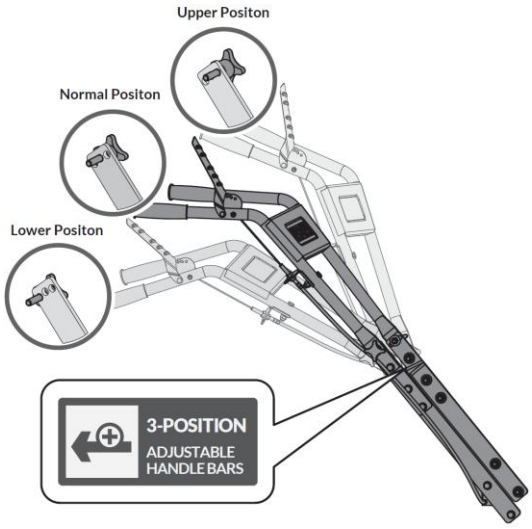

Figure 19

Operating Speed

- For normal tilling, set the throttle control lever to "FAST" for best tiller action.
- The throttle should be set to control forward movement to a slow walking speed for cultivating.
- Set the throttle control lever to "LOW" to reduce stress on the engine when tilling is not being performed.
- Besides depth stake setting, variation of pressure on the handles also helps further control of tilling depth and travel speed.
- A downward pressure on the handles will reduce the tilling depth and increase the forward speed.
- An upward pressure on the handles will increase the working depth and reduce the forward speed.

Tilling

Tilling is digging in, turning over and breaking up garden soil to prepare a seedbed for planting. Best tilling depth is 4" (100mm) to 6" (150mm). A tiller will also clear the soil of unwanted vegetation. The decomposition of this vegetation matter enriches the soil.

Avoid tilling soil that is too dry as it will pulverize and produce a dust that will not hold water. Water the area to be tilled a few days before tilling. Also, tilling soil that is too wet will produce unsatisfactory clods. Wait a day or two after heavy rain for the soil to dry.

Better growth will be obtained if an area is tilled properly and used soon after tilling to preserve the moisture content.

The type of soil and working conditions will determine the actual setting of the tilling depth. In some soils, the desired depth is reached first pass over garden. In other soils, the desired depth is obtained by going over the garden two or three times. In later case, the Drag Stake should be lowered before each succeeding pass over the garden. Passes should be made across the length and width of the garden alternately. Do not try to dig too deeply in the first pass. If the machine jumps or bucks, adjust the Drag Stake to allow the unit to move forward at a slightly faster rate.

If the tiller stops forward motion and tries to dig in one spot, rock the handles from side to side to start it moving forward again.

Rocks which are turned up should be removed from the garden area.

Cultivating

Cultivating is loosening or digging around growing plants to disrupt weeds and aerate soil. Less than 2" (50mm) depth is always desirable.

Idle Speed

1. Set the throttle control lever to the SLOW position to reduce stress on the engine when work is not being performed. Lowering the engine speed will help extend the life of the engine, and will help conserve fuel and reduce noise level.

Chapter 4: Maintaining Your DR FRONT TINE TILLER

This chapter covers regular maintenance procedures that will ensure the best performance and long life of your DR FRONT TINE TILLER. For Engine maintenance, please refer to the Engine Owner's Manual that came with your machine. Service intervals listed in the checklist below supersede those listed in the Engine Owner's Manual. Maintenance Kits and accessories are available through our website at www.DRpower.com.

⚠ WARNING

When performing any inspection or maintenance, you must first shut off the Engine; wait five minutes to allow parts to cool and disconnect the Spark Plug Wire, keeping it away from the Spark Plug.

Regular Maintenance Checklist

Note: *Consider that the service intervals shown are the maximum under normal operating conditions. Increase frequencies under extremely dirty or dusty conditions.*

PROCEDURE	BEFORE EACH USE	EVERY 25 HOURS	EVERY 100 HOURS
Check the Engine Oil Level	▲		
Clean the Tines and Debris Shield*	After each use		
Check the general condition of the machine, e.g. nuts, bolts, welds, etc.	▲		
Clean Engine Exterior & Cooling Fins	▲		
Check the Tine Shear Pins for damage	▲		
Inspect the Tine Drive Belt for wear or damage (replace as needed)	▲		
Check Tines for Wear or damage	▲		
Clean and Grease the Tines Shaft		▲	
Check/add Transmission Grease		▲	
Check/Clean Air Filter		▲	
Change Engine Oil	1st Time 5 hrs	▲	
Replace Air Filter and Pre-cleaner		▲	
Replace Spark Plug			▲

* Cover the Engine Muffler, Carburetor, and Air Filter before using a hose to clean the Tines and Debris Shield.

NOTICE

Never use a "pressure washer" to clean your unit. Water can penetrate tight areas of the machine and its transmission case and cause damage to spindles, gears, bearings, or the engine. The use of pressure washers will result in shortened life and reduce serviceability.

Changing the Engine Oil

Tools and Supplies needed:

- 10mm Wrench
- 14mm Wrench
- Approved Oil Drain Container

1. Position an approved Container under the Oil Drain Tube.
2. Remove the Oil Fill Cap/Dipstick on the left side of the Engine (***Figure 20***).
3. On the right side of the Engine, hold the Oil Drain Tube to prevent it from turning with a 14mm Wrench as you remove the Oil Drain Plug using a 10mm Wrench to drain the oil into the Container.
4. Replace the Oil Drain Plug and Oil Fill Cap/Dipstick.
5. Add Oil the Engine as described in the "Adding the Engine Oil and Gasoline" section in Chapter 2.

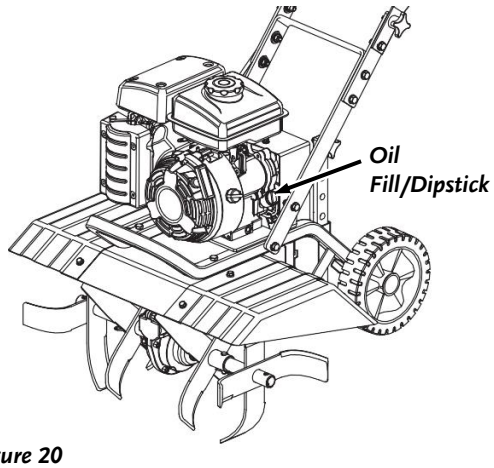

Figure 20

Tine Shaft Lubrication

Lubricate the Tine Shafts at least once every season.

Tools and Supplies needed:

- Two 16mm Wrenches
- General Purpose Grease

1. Remove the Bolt and Locknut securing the Tine Assemblies to the Shafts on both sides using two 16mm Wrenches (***Figure 21***).
2. Apply Grease to the Shafts and reinstall the Tine Assemblies.

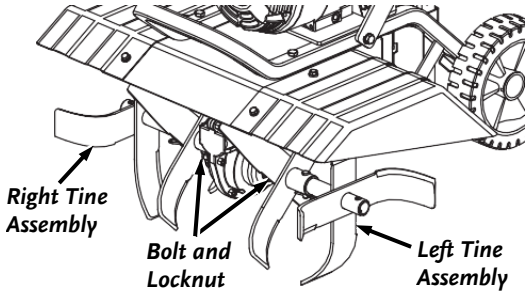

Figure 21

Transmission Lubrication

The Transmission is lubricated and sealed at the factory. At the beginning of each season, make sure enough lubricant inside the Transmission.

Tools and Supplies needed:

- Two 16mm Wrenches
- 13mm Wrench
- Portable tool lithium #0 grease such as Lubricate 6300AA , Lubricate GR-132, or Multifak EP-0

1. Place the Tiller on level surface. Allow the Transmission to cool before filling with Grease.
2. Remove the Bolt and Locknut securing the left side Tine Assembly to the Shaft using two 16mm Wrenches (***Figure 22***).
3. Remove the two Bolts above the Shaft using a 13mm Wrench (***Figure 23***).
4. Fill the Transmission through the front hole until the grease begins to come out from the rear hole.
5. Reinstall the two Bolts and reinstall the Tine Assembly.

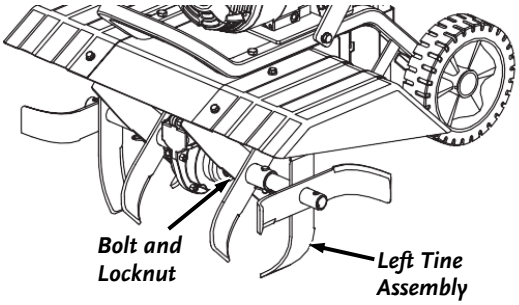

Figure 22

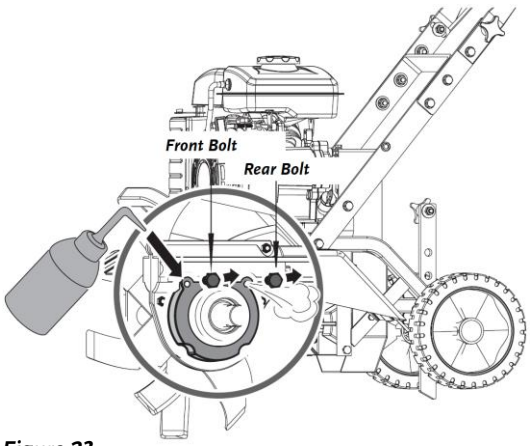

Figure 23

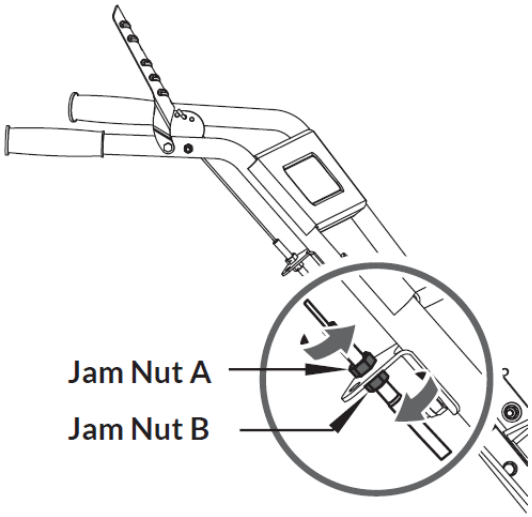

Figure 24

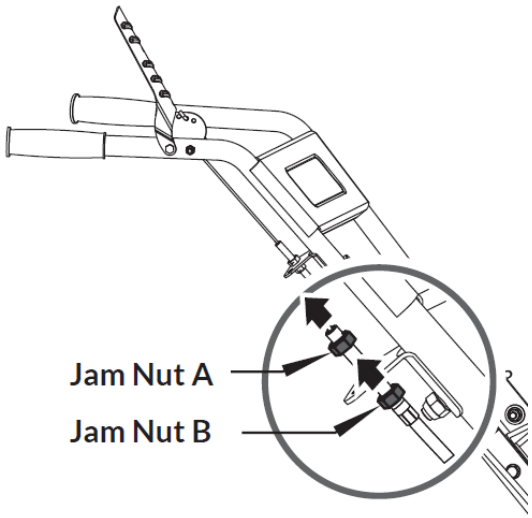

Figure 25

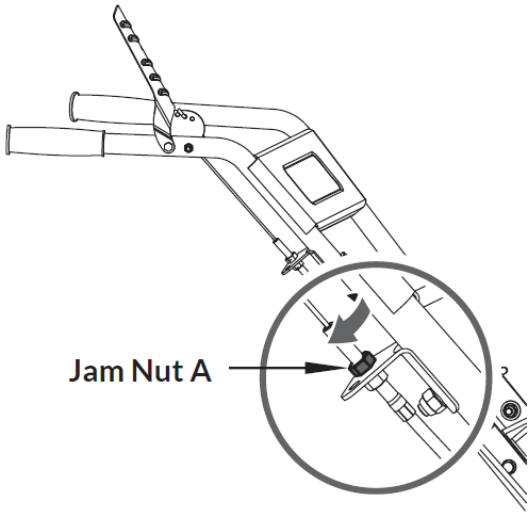

Figure 26

Adjusting the Drive Cable

Tools needed:

- Two 12mm Wrenches

1. Loosen Jam Nut "A" and "B" with two 12mm wrenches (***Figure 24***)
2. Rotate jam nut "A" enough so the jam nut "B" can be rotated up. Rotate jam nut "B" up against the Bracket until desired cable tightness is reached (***Figure 25***).
3. Hold Jam Nut "B" in position against the Bracket with the Wrench as you tighten Jam Nut "A" down against the Bracket to lock the Cable in place (***Figure 26***).

Replacing the Drive Belt

Tools needed:

- 10mm Wrench
- 13mm Wrench

1. Adjust the Drag Stake down to lift the Wheels off the ground.
2. Remove the four Bolts, Flat Washers and Lock Washers in the Lower Belt Guard using a 10mm Wrench and remove the Guard (***Figure 27***).
3. Remove the Bolt, Flat Washer and Lock Washer in the Upper Belt Guard using a 10mm Wrench and remove the Guard.

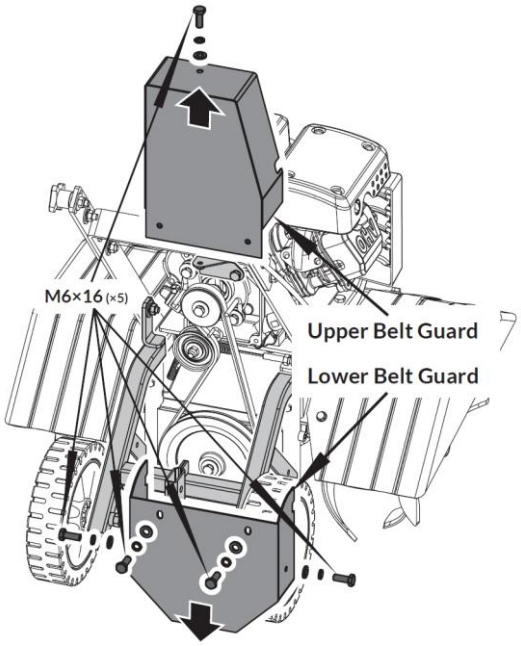

Figure 27

Note: *Observe the location and space of the Belt Guides in reference to the Belt and Engine Pulley before the next step.*

4. Loosen the Bolts that secure the two Belt Guides to the Engine using a 13mm Wrench and leave the Guides in place (***Figure 28***).
5. Remove the Belt from around the Engine Pulley, Idler Pulley, and Transmission Pulley.
6. Install the new Belt around the Engine and Transmission Pulleys and inside the Idler Pulley.
7. Position the Belt Guides on the outside of the Belt with about 1/8" between the Guides and Engine Pulley as you tighten the Bolts. When the Guide Bolts are tight, ensure the Guide is approximately 1/8" away from the Pulley and not touching the Belt.
8. Reposition the Upper Belt Guide and secure at the top with the Bolt, Lock washer and Flat Washer.
9. Reposition the Lower Belt Guide and secure with the four Bolts, Lock Washers and Flat Washers.
10. Readjust the Drag Stake to the transport position.

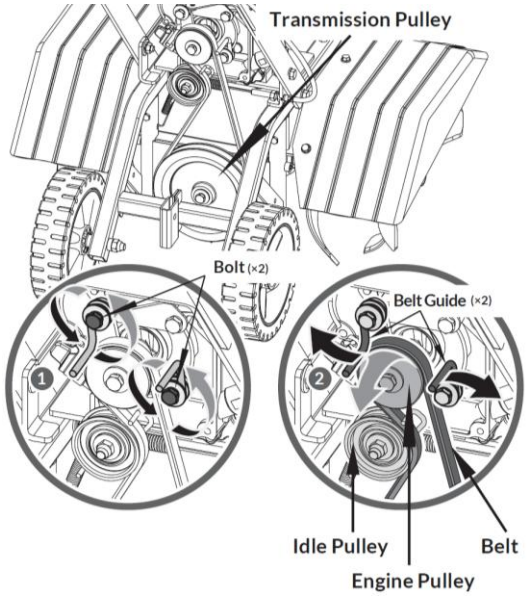

Figure 28

Tine Shear Pins

The DR FRONT TINE TILLER drive components are protected from damage by Shear Pins in the Tine Assemblies. The Shear Pins hold the Tine Assemblies in the proper location on the Drive Axles. Should a Tine Assembly strike or pick up a large object and jam, the Shear Pin holding the Tine Assembly to the drive shaft will shear, protecting the drive components of the DR FRONT TINE TILLER from major damage. Replace Damaged or missing Shear Pins.

NOTICE

NEVER attempt to use a Shear Pin that is larger or harder than the original grade of Shear Pin.

Engine Maintenance

For information on engine maintenance, refer to the Engine Manual included with your machine. Your engine manual provides detailed information and a maintenance schedule for performing maintenance tasks.

Chapter 5: Troubleshooting

Most problems are easy to fix. Consult the Troubleshooting Table for common problems and their solutions. If you continue to experience problems, visit our website at **www.DRpower.com** or call: 1-800-DR-OWNER (376-9637) for support.

Troubleshooting Table

⚠ WARNING

When performing any maintenance, you must first shut off the Engine; wait five minutes to allow parts to cool and disconnect the Spark Plug Wire, keeping it away from the Spark Plug.

SYMPTOM	POSSIBLE CAUSE
Recoil will not pull out or is difficult to pull.	⇒ Check the Engine Oil level; the Engine may be seized. ⇒ There may be an Oil compression lock in the Cylinder. Take out the Spark Plug; hold a rag over the Spark Plug Hole and pull the Recoil Cord several times to blow out any Oil in the Cylinder. Wipe off the Spark Plug and reinstall it. ⇒ The Recoil may be broken or jammed. Visit our website at www.DRpower.com.
The Engine will not start. *(Please refer to the Engine Owner's Manual for Engine-specific procedures.)*	⇒ Check that the Spark Plug Wire is attached. ⇒ Check the Oil and Gas level. ⇒ The Gas may be old; change it if necessary. Use a fuel stabilizer if you keep Gas longer than one month. ⇒ The Fuel Tank may be clogged. Remove it and clean it out. ⇒ Check the Throttle and Choke settings, adjustment and travel. ⇒ The Engine is "Choked" improperly, flooding the Engine. Move the Choke to the RUN position, move the Throttle to the FAST position and pull the Recoil Starter several times to clear out Gas. ⇒ The Spark Plug may be dirty or cracked; change it if necessary. If it's oily, leave it out, hold a rag over the Plug Hole and pull the Recoil Cord several times to blow out any Oil in the Cylinder, then wipe off the Plug and reinsert it. ⇒ The Air Filter may be dirty; change it following the procedure in the Engine Owner's Manual. ⇒ If your Engine still won't start, visit our website at www.DRpower.com.
The Engine lacks power or is not running smoothly. *(Please refer to the Engine Owner's Manual for engine-specific procedures.)*	⇒ The Engine is overloaded. Set Depth Stake and Wheels for shallower tilling. ⇒ Check the Throttle; it should be set in the FAST position. ⇒ The Air Filter may be dirty; change it following the procedure in the Engine Owner's Manual. ⇒ The Spark Plug may be dirty or cracked; change it if necessary. If it's oily, leave it out, hold a rag over the Plug hole and pull the Recoil Cord several times to blow out any Oil in the Cylinder, then wipe off the Plug, check the gap and reinsert it. ⇒ The Gas may be old; change it if necessary. Use a fuel stabilizer if you keep Gas longer than one month. ⇒ The Engine Oil may be dirty. Change it if necessary. ⇒ If your Engine still lacks power, visit our website at www.DRpower.com.

⚠ WARNING

When performing any maintenance, you must first shut off the Engine; wait five (5) minutes to allow parts to cool and disconnect the Spark Plug Wire, keeping it away from the Spark Plug.

SYMPTOM	POSSIBLE CAUSE
Engine smokes and overheats.	⇒ Check the Oil level and adjust as needed. ⇒ The Air Filter may be dirty; change it following the procedure in the Engine Owner's Manual. ⇒ You may be using the wrong Oil. Refer to your Engine Owner's Manual for detailed information. ⇒ Clean the Engine cooling fins and the Carburetor Housing if they are dirty. ⇒ If the Engine still smokes, visit our website at www.DRpower.com.
The Engine runs well but the Tines won't move.	⇒ Shear Pins damaged. ⇒ The Tine Drive Lever is not engaged. ⇒ The Tine Drive V-Belt is off the pulleys or broken.
The Engine runs well but labors when tilling.	⇒ Operator is being too aggressive; raise the Tines. ⇒ The tilling is too deep. Adjust the Depth Stake. ⇒ Be sure the Engine Throttle is set on the Fast (RABBIT) position.
Excessive bounce and difficult handling.	⇒ The area you are tilling may be too dry and hard. Moisten the ground or wait for conditions that are more favorable. ⇒ Be sure the Engine Throttle is set on the Fast (RABBIT) position. ⇒ The Drag Stake are incorrectly adjusted. Readjust Drag Stake. ⇒ If your DR FRONT TINE ROTOTILLER still bounces, visit our website at www.DRpower.com.
The tilled soil balls up or clumps.	⇒ The ground that you are trying to till is too moist.
Tiller surges forward.	⇒ Drag Stake is set too high. Lower the Drag Stake to slow the machines forward motion. ⇒ The Tines are engaged while on the ground or in the soil. Ensure the Tines are raised and are not in contact with anything before engaging. ⇒ Tilling in an area with large roots, surface rocks or other debris. Remove obstacles if possible. If obstacles cannot be removed, do not use the Tiller in that area. ⇒ The rotating Tines are lowered too fast. Lower the Tines slowly into area to be tilled to prevent overload; especially in untilled sod.

Parts List - Main Assembly

Note: *Part numbers listed are available through DR Power Equipment.*

Ref#	Part#	Description
1	A0000946500	Grip-Handlebar
2	A0001316953	Handlebar-Upper
3	A0000946502	Handlebar Knob-M8 X 25
4	A0000946503	Cable-Tensioning Pulley
5	A0000947567	Cap Screw-M6 X 35
6	A0000947568	Nut-M5 Flange Nylon Lock
7	A0001316958	Lever-Drive Control
8	A0000947569	Hex Bolt-M5 X 40
9	A0000947584	Nut-M6 Nylon Lock
10	A0000947585	Hex Bolt-M8 X 25 Flange
11	A0001316960	Bracket-Handlebar Adjust
12	302471	Washer-M8
13	333421	Nut-Nylon Lock Flanged M8-1.25 Cl8 Zp
14	A0001316961	Handlebar-Lower
15	A0000947598	Hex Bolt-M8 X 45
16	A0000946508	Drag Stake
17	A0000946510	Cap-Wheel
18	A0000946511	Belt-4lxp85
19	402911	Hex Bolt-M6 X 20
20	A0000941125	Washer-M6 Split Lock
21	A0000940904	Washer-M6 Flat
22	A0000946513	Pulley-Small
23	A0000946515	Flat Key-Pulley 5 X 5 X 30
24	A0000946516	Pulley-Tensioning
25	A0000938005	Hex Bolt-M8 X 30
26	303611	Washer-M16 Flat
27	A0000940903	Washer-M8 Split Lock
28	A0000946517	Lock Ring-Drive Pulley
29	A0000946518	Bushing-Bearing
30	A0000946519	Belt Guide-Upper
31	A0000946521	Belt Guide-Lower
32	A0000947524	Return Spring-
33	A0000947525	Bushing-Slide
34	A0000947526	Bracket-Tensioning Pulley
35	A0001316965	Guard-Upper Belt
36	A0000947666	Hex Bolt-M10 X 100
37	A0000947667	Hex Bolt-M8 X 235
38	A0000947668	Hex Bolt-M6 X 16 Flange
39	A0000940904	Washer-M6 Flat
40	A0000947672	Hex Bolt-M6 X 40
41	337031	Hex Bolt-M8 X 25
42	324001	Hex BOLT-M8 X 20
43	A0000947682	Washer-M8 Flat
44	A0000947528	Bracket-Belt Guard Mount
45	A0001316841	Engine-Dr 98cc
46	A0000953186	Hex Bolt-M8 X 40
47	A0001316967	Frame Weldment-
48	A0000953197	Nut-M10 Nylon Lock
49	A0000953202	Washer-M10 Flat
50	A0001316970	Tine Shield-Left
51	A0000947531	Bushing-Wheel
52	A0000947532	Wheel-
53	A0000947584	Nut-M6 Nylon Lock
54	A0001316971	Tine Shield-Middle
55	A0001316973	Tine Shield-Right
56	A0000953209	Hex Bolt-M6 X 16
57	A0000953210	Pin-8 X 32
58	A0000953211	Cotter Pin-2.5mm Dia X 45
59	A0000947535	Bracket-Cable
60	371321	Hex Bolt-M10 X 50
61	A0000947536	Inner Tine-Right
62	A0000953216	Pin-8 X 45
63	A0000947537	Outer Tine -Right
64	A0000947538	Case-Transmission
65	A0001316974	Guard-Lower Belt
66	A0000947540	Inner Tine-Left
67	A0000947541	Outer Tine-Left
68	A0000947542	Cover-Bearing
69	A0000941175	Cap Screw-M6 X 25
70	A0000947544	Oil Seal-Fb25 X 40 X 8
71	A0000947545	Transmission Case-Right
72	A0000947546	Snap Ring-25
73	A0000947547	Bearing-6005 - 2z(Hch)
74	A0000947549	Bushing-Worm Gear
75	A0000947550	Bearing-30204(Hch)
76	A0000947551	Axle-Worm Gear
77	A0000947552	Worm-
78	A0000947553	Flat Key-Worm Gear A6 X 28
79	A0000947554	Worm Gear-
80	A0000947555	Bearing-6004 - 2rs
81	A0000947556	Flat Key-Worm Pulley 5 X 5 X 20
82	A0000947557	Pulley-Worm
83	A0000947558	Transmission Case-Left
84	A0000947736	Hex Bolt-M8 X 12

Schematic Diagram - Main Assembly

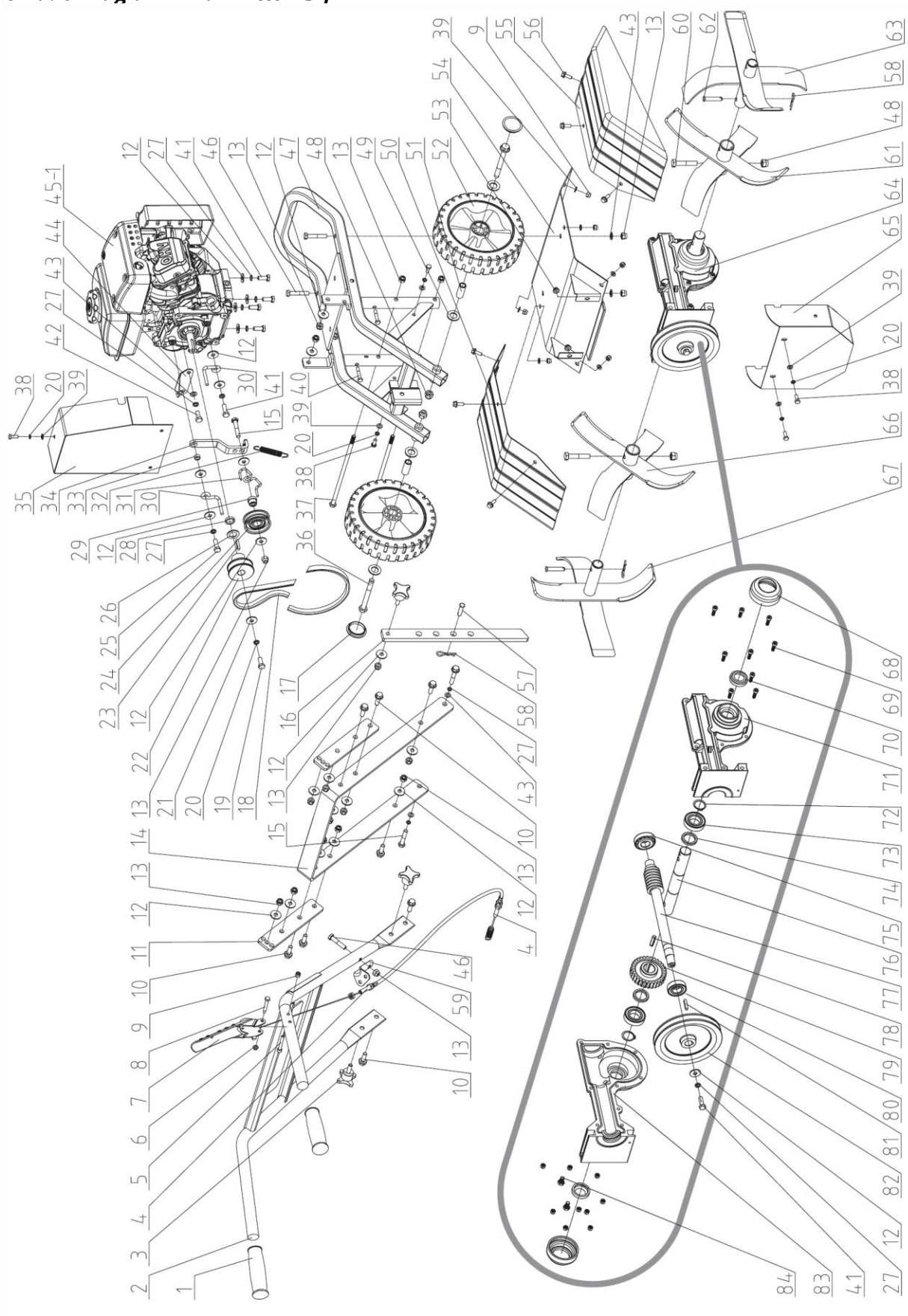

Notes:

DR® FRONT TINE ROTOTILLER

2-Year Limited Warranty

Terms and Conditions

The **DR®** FRONT TINE ROTOTILLER is warranted for two (2) years against defects in materials or workmanship when put to ordinary and normal consumer use; ninety (90) days for any other use. The Engine Manufacturer warrants the Engine separately.

For the purposes of all the above warranties, "ordinary and normal consumer use" refers to non-commercial residential use and does not include misuse, accidents, or damage due to inadequate maintenance.

DR® Power Equipment certifies that the **DR®** FRONT TINE ROTOTILLER is fit for ordinary purposes for which a product of this type is used. **DR®** Power Equipment however, limits the implied warranties of merchantability and fitness in duration to a period of two (2) years in consumer use, ninety (90) days for any other use.

The 2-Year Limited Warranty on the **DR®** FRONT TINE ROTOTILLER starts on the date the machine ships from our factory. The 2-Year Limited Warranty is applicable only to the original owner.

The warranty holder is responsible for the performance of the required maintenance as defined by the manufacturer's owner manuals. The warranty holder is responsible for replacement of normally wearing parts such as the Drive Belt, Tines, Tires, Shear Pins, Spark Plug and Air Filter. Attachments and accessories to the machine are not covered by this warranty.

During the warranty period, the warranty holder is responsible for the machine transportation charges, if required. During the warranty period, warranty parts will ship by standard method at no charge to the warranty holder. Expedited shipping of warranty parts is the responsibility of the warranty holder.

SOME STATES DO NOT ALLOW LIMITATIONS ON THE LENGTH OF IMPLIED WARRANTIES, SO THE ABOVE LIMITATIONS MAY NOT APPLY TO YOU.

DR® Power Equipment shall not be liable under any circumstances for any **incidental or consequential damages or expenses** of any kind, including, but not limited to, cost of equipment rentals, loss of profit, or cost of hiring services to perform tasks normally performed by the **DR®** FRONT TINE ROTOTILLER.

SOME STATES DO NOT ALLOW THE EXCLUSION OR LIMITATION OF INCIDENTAL OR CONSEQUENTIAL DAMAGES, SO THE ABOVE LIMITATIONS MAY NOT APPLY TO YOU.

THIS WARRANTY GIVES YOU SPECIFIC LEGAL RIGHTS, AND YOU HAVE OTHER RIGHTS, WHICH VARY FROM STATE TO STATE.

Daily Checklist for the DR FRONT TINE ROTOTILLER

⚠ WARNING

When performing any maintenance, you must first shut off the Engine; wait five (5) minutes to allow parts to cool and disconnect the Spark Plug Wire, keeping it away from the Spark Plug.

To help maintain your DR FRONT TINE ROTOTILLER for optimum performance, we recommend you follow this checklist each time you use your machine.

[ ] Check the engine oil level.
[ ] Check the gas Level
[ ] Check the general condition of the Tiller, e.g.; nuts, bolts, welds, etc.
[ ] Check belt for wear, damage or stretching.
[ ] ENGINE: It is very important to keep the Engine clean. Remove dirt and other debris from the Engine Cooling Fins. A dirty Engine retains heat and can cause damage to internal Engine components.
[ ] HARDWARE: Check all nuts and bolts to be sure that the components are secure.
[ ] FRAME: Check all welds to be sure that the Frame is intact and secure.
[ ] TINES: Make sure that the Tine Assemblies and Debris Shield are free of accumulated debris.

End of Season and Storage

⚠ WARNING

When performing any maintenance, you must first shut off the Engine; wait five (5) minutes to allow parts to cool and disconnect the Spark Plug Wire, keeping it away from the Spark Plug.

NOTE: *Please refer to the Engine Owner's Manual for Engine-specific procedures.*

- Change the Engine oil.
- If your DR FRONT TINE ROTOTILLER will be idle for more than 30 days, we recommend using a gas stabilizer. This will prevent sediment from gumming up the Carburetor. If there is dirt or moisture in the Gas or Tank, remove it by draining the Tank. Completely fill the Tank with fresh, unleaded Gas and add the appropriate amount of stabilizer or gasoline additive. Run the Engine for a short time to allow the additive to circulate.
- Remove the Spark Plug and pour about 1 ounce of motor oil into the cylinder hole. Replace the Plug and pull the Recoil Starter Rope until you feel strong resistance. This will coat the Piston and seat the Valves to prevent moisture buildup.
- Clean or replace the Engine Air Filter. Reference the Engine Owner's Manual.
- Clean dirt and debris from the Engine Cylinder Head Cooling Fins, Debris Screen, and Muffler.
- Clean out residual debris from the under the Debris Shield and Tine Assemblies.
- Lubricate the Tine Assemblies and Wheels.
- Touch up all rusted or chipped painted surfaces. Sand them lightly before painting.
- Be sure all Nuts, Bolts, and Screws are securely fastened.
- Inspect moving parts and the Tine Drive Belt for damage and wear; replace if necessary.
- If possible, store your DR FRONT TINE ROTOTILLER inside, but not near an open flame or spark such as found in a water heater.
- After the DR FRONT TINE ROTOTILLER has cooled, cover the machine with a suitable protective cover that does not retain moisture. Do not use plastic, as this material cannot breathe; it also allows condensation to form, which will cause your machine to rust.

800 HINESBURG ROAD, SOUTH BURLINGTON, VERMONT 05403

©2021 DR Power Equipment. All rights reserved