ASSEMBLY INSTRUCTION

DDP-1854

Ⓐ 3.5x40=8x

Ⓑ 3.5x30=48x

PARTS

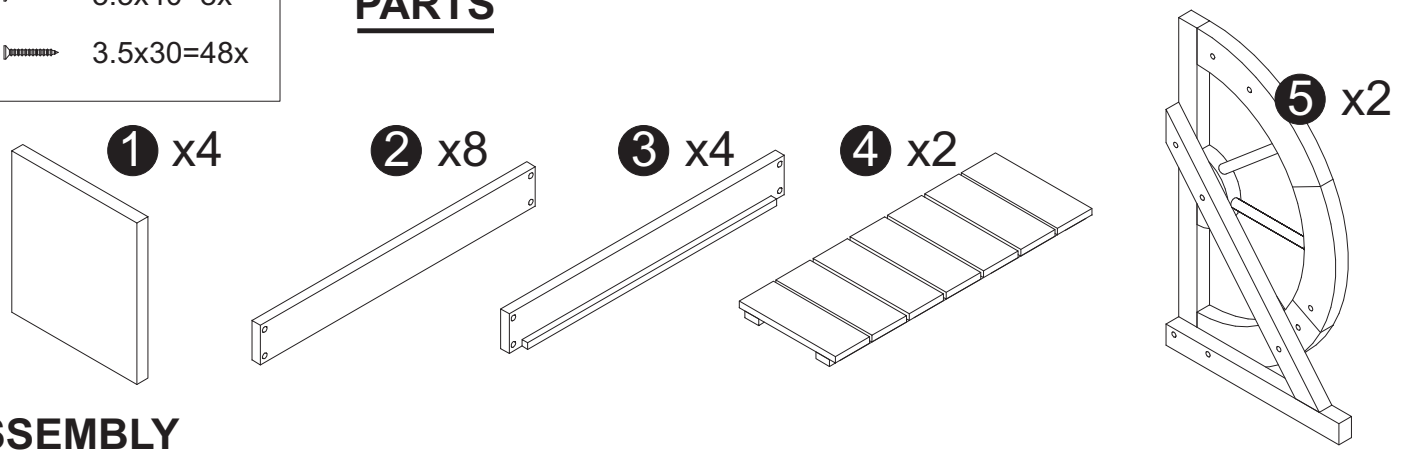

ASSEMBLY

1

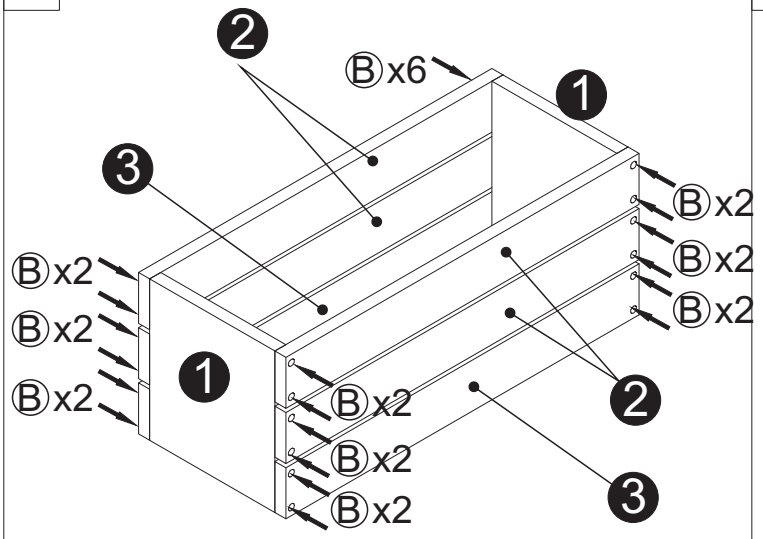

Ⓑ 24x2=48

2

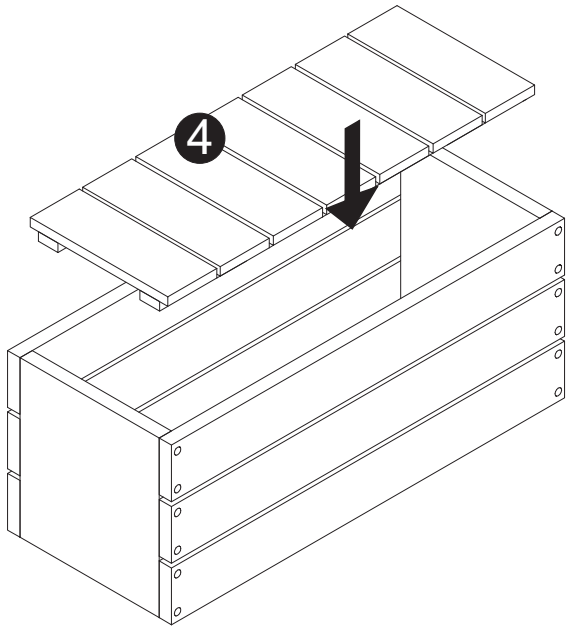

3

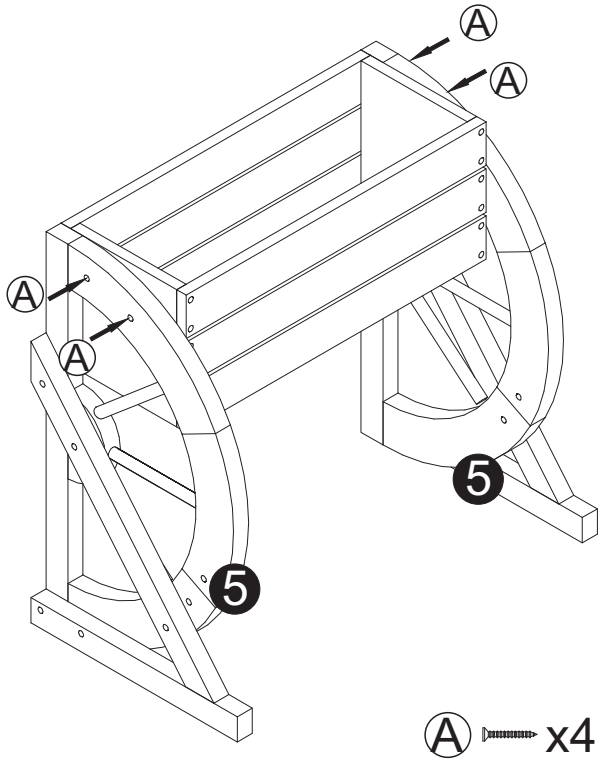

Ⓐ x4

4

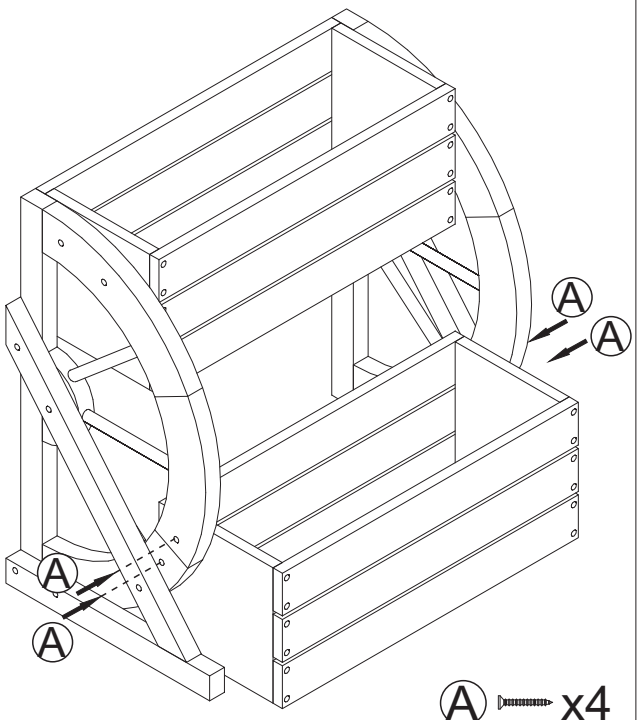

Ⓐ x4