CHEMICAL PUMP

USE AND CARE MANUAL

Models covered:
SCP71008 - 2" Chemical Pump
SCP71009 - 2" Chemical Pump

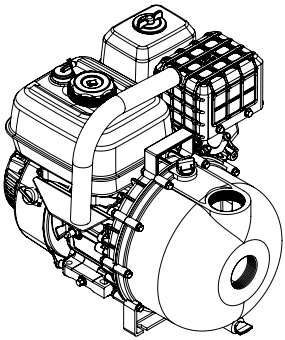

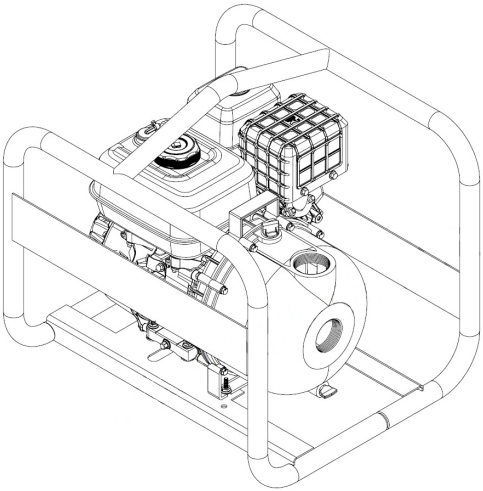

READ THIS MANUAL CAREFULLY BEFORE OPERATION
Failure to follow the instructions and safety precautions in this manual can result in property damage, serious injury and/or death.

SAVE THIS MANUAL FOR FUTURE REFERENCE

NOTE: Photographs and line drawings used in this manual are for reference only and may not represent your specific model.

Part Number 7117700 / ENGLISH REV 2 - 07/2022

NOTES

THIS PAGE WAS INTENTIONALLY LEFT BLANK

Save this manual for future use

Keep this manual for future reference. This manual should be considered a permanent part of the product and be retained with it. This manual should be available to anyone operating the product(s) it covers. This manual should remain with the product(s) it covers if sold to a new owner. If the manual becomes damaged, lost, or otherwise unusable, please contact customer support by calling 1-877-362-4271 or emailing cservice@fna-group.com to request a new copy.

Write down the model number, serial number, and purchase date of this product in the spaces provided below then keep this manual with the purchase receipt(s) for future reference.

Model Number: _____

Serial Number: _____

Purchase Date: _____

TABLE OF CONTENTS

NOTES ..... **II**
Save this manual for future use 1

TABLE OF CONTENTS **2**

SAFETY INSTRUCTIONS **4**
Read This Manual Before Operating 4
Additional Instructions 4
Hazard Alert Symbols 4

DISCLAIMERS **5**

UNPACKING **5**

ABOUT THE CHEMICAL PUMP **6**

COMPONENT LOCATION **7**

OPERATING CHECKLIST **8**
Location 8
High Altitude Operation 9
Operating Conditions 9
Checking the Engine Oil 10
Checking Fuel 12

CONNECTING HOSES **14**
Hose Placement 14

PRIMING THE PUMP **15**
Priming the pump 15

STARTING **16**
Starting the Engine 16

SHUTTING OFF ENGINE **17**

MAINTENANCE **18**
Pump maintenance 18
Engine Maintenance 20

STORAGE AND TRANSPORTATION **20**
Storing for two months or less 20
Storing for more than two months 21
Transportation 21

SPECIFICATIONS **22**
Model Number: SCP71008 / Item Number: 71008 22
Model Number: SCP71009 / Item Number: 71009 22

WARRANTY **23**

SAFETY INSTRUCTIONS

Read This Manual Before Operating

This manual contains important safety information and instructions. **Do not** operate this product until you have read and completely understand all safety, operation, and maintenance instructions listed in this manual. Failure to follow the information listed in this manual before operation will result in property damage, injury, and/or death.

NOTE: The warnings and precautions discussed in this manual cannot cover all conditions and situations that may occur. The operator must understand awareness and caution are factors which cannot be built into this product and so must be exercised by the operator.

Additional Instructions

Along with this manual, be sure to read any additional instructions provided both on and with the product, attached equipment, accessories, and the engine powering the product. Pay careful attention to all additional safety rules and instructions on proper startup, operation, and shutdown procedures. Always use any protective apparel that may be needed to operate the equipment safely.

Hazard Alert Symbols

Be sure to understand the safety symbols and definitions listed below. Each symbol contains one of four words: **DANGER**, **WARNING**, **CAUTION**, ***NOTICE*** each of these words indicates a different level of hazard severity. These symbols are used throughout this manual with information about specific hazard, the consequences of the hazard, and instructions on how to avoid the hazard. Failure to heed these symbols and the instructions provided with them will result in property damage, injury, and/or death.

DANGER — Indicates an imminently dangerous situation which, if not avoided, will result in property damage, serious injury, and/or death.

WARNING — Indicates a potentially hazardous situation which, if not avoided, could result in property damage, serious injury, and/or death.

CAUTION — Indicates a hazardous situation, which if not avoided, could result in property damage and/or minor to moderate injury.

NOTICE — Indicates information considered important but not directly hazard related.

CALIFORNIA PROPOSITION 65 WARNING

This product and the engine exhaust can expose you to chemicals which are known to the state of California to cause cancer, birth defects, or other reproductive harm. For more information on California Proposition 65, go to www.P65Warnings.ca.gov.

POLYCYCLIC AROMATIC HYDROCARBON WARNING

The air filter element and air box assembly may contain polycyclic aromatic hydrocarbons (PAHs). Some PAHs may cause cancer. To avoid exposure to PAHs, wear gloves when performing air filter maintenance.

DISCLAIMERS

- All information in this publication was based on the latest product information available at the time of printing. The FNA Group reserves the right to change, alter, and/or improve the product and this document at any time, without notice, and without incurring any obligation.
- The pictures and figures in the manual should be used for reference only. There may be differences between the pictures, drawings, figures, and the physical product.
- This pump may be equipped with a spark arrestor muffler. The spark arrestor must be maintained in effective working order by the owner/operator. In the State of California, a spark arrestor is required by law (Section 4442 of the California Public Resources Code). Other states may have similar laws. Federal laws apply on federal lands.

UNPACKING

Follow the steps outlined in this section to unpack and assemble your pump. If you have any questions regarding the unpacking or assembly of your pump, please have your model number and serial number ready, then contact customer support at 1-877-362-4271 or email cservice@fna-group.com.

1. Place the shipping carton on a solid, flat surface.
2. Carefully cut the top of the carton open.
3. Carefully cut each corner of the carton from top to bottom.
4. Lay each side of the carton flat on the ground.
5. Remove everything from the carton.

ABOUT THE CHEMCIAL PUMP

The SIMPSON Chemical Pump was designed for everyday pumping of irrigation water, outdoor standing water (clean, not dirty) and general agricultural/farming pumping of liquid fertilizers, herbicides and pesticides that have a **PH range of 4 to 11**.

NEVER use the chemical pump with flammable liquids or corrosive chemicals.

If you are unsure of your application with the chemical pump, have questions about its assembly or general usage, please contact our customer service at 1-877-362-4271 or through email: cservice@fna-group.com

Usage of this pump with fertilizer, herbicides and pesticides brings responsibility that cannot be engineered into the pump. Before using any of these chemicals with the pump, read and understand all precautions from the chemical manufacturer. Know how to safely handle the chemicals. Always wear personal protective equipment (PPE) that is instructed by the chemical manufacturer. Know what to do in case of accidents.

Before using the chemical pump:

- Read and understand this manual, the engine manual and any literature for the chemicals you will be using with this pump.

- Never use the chemical pump with dry or aerosolized chemicals.

- Know all emergency policies for the chemical being used including who to contact in case of a spill.

- Keep material safety data sheets (MSDS) for the chemicals being used with the pump for use by first responders during an accident.

- Avoid coming in contact with the chemicals being pumped. Always wear proper PPE for the chemical being pumped.

- **DO NOT USE** this pump to convey fluids intended for human consumption.

- Never use the pump to mix chemicals when inside any structure.

- Always store chemicals in containers that are approved for its containment and CLEARLY label the containers as to its contents as well as attach MSDS to the container.

- Never use the chemical pump (or allow someone else) when intoxicated, under the influence of narcotics or tired.

- Never allow children to use this pump. Children, pets and livestock must be removed from the area of usage. This is vital when using the pump with chemicals.

- **DO NOT USE** this pump with flammable or corrosive liquids.

- **DO NOT USE** this pump to convey gasoline, diesel or fuel oil.

- Never use this pump for water that is dirty, muddy, contains trash or is effluent.

- Always clean the pump after each use by draining the pump of chemicals and flushing with clean water. Always disposed of the chemicals and flushed water responsibly and within all local, state and federal laws.

COMPONENT LOCATION

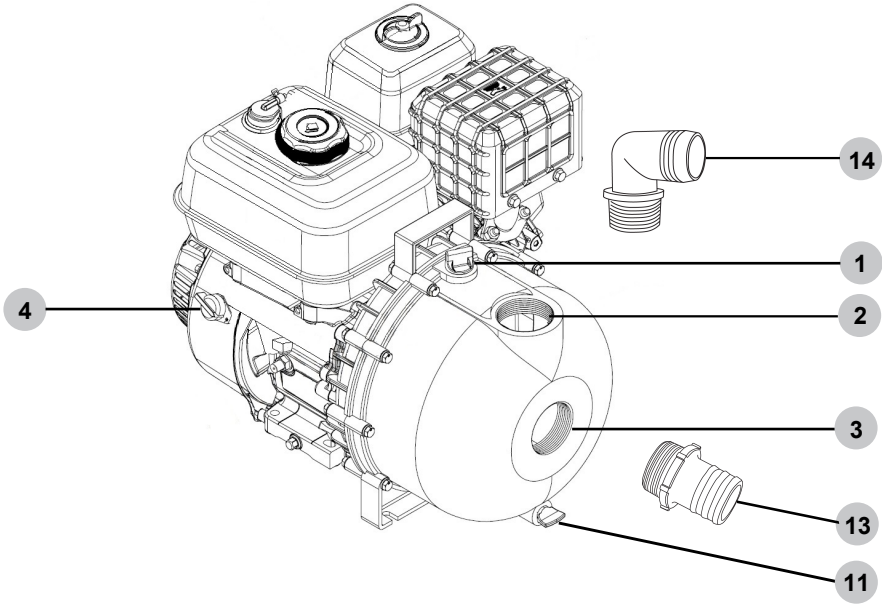

1). Primer port
2). Discharge port
3). Suction port
4). Engine ignition switch
5). Starter recoil
6). Fuel tank
7). Fuel tank cap
8). Fuel switch
9). Engine choke
10). Throttle lever
11). Pump drain plug
12). Spark plug
13). Suction barb
14). Discharge barb

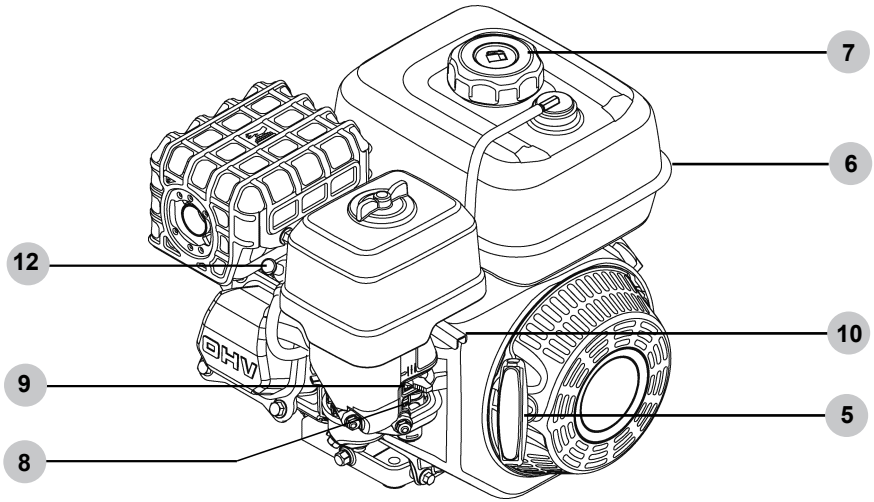

OPERATING CHECKLIST

Location

Place the pump on a level surface outside in a well-ventilated area before any operation. Keep all flammable materials at least five feet away from all sides of the product.

- Never use pump inside a house, garage, or any other kind of enclosure even if doors and windows are open. Run engine outside at least 20 feet (6 meters) away from windows, doors, and vents. Carefully consider wind direction and air currents when using pump outside to avoid breathing in engine exhaust.
- Following the manufacturer's instructions and recommendations, install a battery operated carbon monoxide alarm in any occupied buildings near the running engine.
- If you experience headache, nausea, dizziness, sleepiness, or weakness while pump is running, move to fresh air and seek medical attention immediately.

WARNING **TOXIC FUMES**

Engine exhaust contains carbon monoxide, an odorless, colorless, poisonous gas. Running an engine indoors will kill you in minutes. Never use this product inside a house, garage, or any other kind of enclosure even if doors and windows are open. Run engine outside at least 20 feet (6 meters) away from windows, doors, and vents. Carefully consider wind direction and air currents when using this product outside to avoid breathing in engine exhaust. Always use a carbon monoxide detector in any occupied buildings near the running engine.

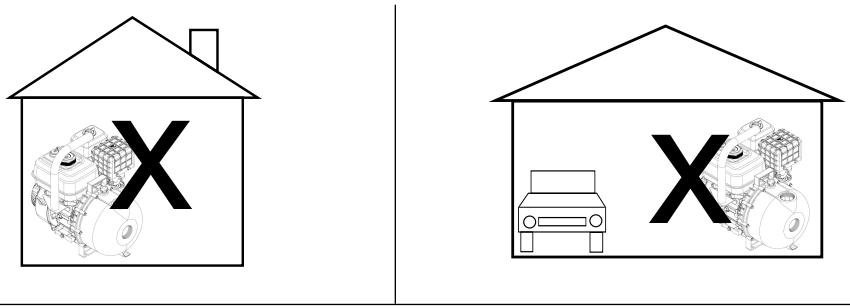

High Altitude Operation

This engine will have proper engine performance and emission control when it is operated at or below an altitude of 5000 feet (1524 meters). This engine requires a high-altitude carburetor kit to ensure proper engine performance and emission control when operated at altitudes above 5000 feet (1524 meters). Operating the engine with the wrong engine configuration above 5000 feet (1524 meters) may increase its emissions and decrease fuel efficiency, and hurt performance. To obtain a high altitude carburetor kit, contact your nearest authorized service center.

NOTICE **ALTITUDE**

Operating the engine with a high-altitude carburetor jet kit at an altitude below 5000 feet (1524 meters) will cause the engine to run too hot. Overheating the engine could result in serious engine damage. To avoid damaging the engine, make sure the correct carburetor kit is installed and the air/fuel mixture is correctly set for your altitude.

Operating Conditions

Before each use, check for loose or damaged parts, oil or fuel leaks, and/or any other condition that may affect proper operation. Repair or replace all damaged or defective parts immediately. Always keep all safety guards in place and in proper working order. For safety reasons, the manufacturer recommends all maintenance and repairs be performed by an authorized service center.

Before starting the engine, remove any excessive dirt and debris especially from any cooling vents, exhaust and muffler, and starter recoil areas. Never move or tip the pump while operating. Use pump only for its intended purpose. If you have questions about the proper use of your pump, please contact customer support at 1-877-362-4271 or cservice@fna-group.com.

WARNING **UNTRAINED OPERATION**

Untrained persons, young children, and pets can be seriously injured or killed if allowed to incorrectly operate or play with running pump. Be sure anyone operating the pump receives proper instructions, understands safe operation, and has read the owner's manual before operating this product. Do not let children operate the pump. Keep young children and pets away from the pump while it is running. Always turn off the pump before leaving the area.

WARNING **INSPECT BEFORE OPERATING**

Failure to inspect this product before use could result in a hazardous situation resulting in product damage, serious injury and/or death. To avoid these hazards, inspect the pump before each use. Check for loose or damaged parts, signs of oil or fuel leaks, missing guards, plugged cooling vents, or any other condition that may affect proper operation. Repair or replace all damaged or defective parts, keep all safety guards in place and in proper working order before using the pump.

CAUTION **HOT SURFACES**

A running engine produces heat. The surfaces of the engine, other related components, and engine exhaust gas get hot enough to cause moderate burns or ignite materials on contact. To avoid burns, do not touch engine surfaces or exhaust gases while operating and allow engine to cool completely before moving, touching, or performing any maintenance. To avoid a fire, keep all flammable materials at least five feet away from all sides of the product.

WARNING **MOVING PARTS**

This product has many parts that move at high speeds. Moving parts can cause crushing injuries, broken bones, severe lacerations, and/or traumatic amputations. To prevent injury, never place fingers, hands, feet, or other body parts near running engine. Never operate product with covers, shrouds, or other guards removed. Do not wear loose-fitting clothing, dangling drawstrings, or any other hanging items that could become entangled in moving parts while operating. Tie up long hair and remove jewelry before operating.

Checking the Engine Oil

CAUTION **HOT OIL**

Hot oil can cause serious burns. To prevent getting burned when changing or checking the engine oil, use gloves to prevent oil from contacting skin and change the oil when the engine is warm from operating but not hot.

CAUTION **HOT SURFACES**

A running engine produces heat. The surfaces of the engine, other related components, and engine exhaust gas get hot enough to cause moderate burns or ignite materials on contact. To avoid burns, do not touch engine surfaces or exhaust gases while operating and allow engine to cool completely before moving, touching, or performing any maintenance. To avoid a fire, keep all flammable materials at least five feet away from all sides of the product.

NOTICE **LOW OIL SENSOR**

The low oil sensor (if equipped) will automatically stop the engine when the oil level falls below the safe limit. To avoid an unexpected shutdown, check the oil level regularly, fill to the upper limit, and always operate engine on a level surface.

NOTICE **FILL ENGINE OIL BEFORE USE**

The engine is shipped from the factory without oil. Running the engine without oil will result in severe engine damage and void the warranty. To avoid causing engine damage and voiding the warranty, fill the engine with the recommended oil type.

NOTICE **USE CORRECT ENGINE OIL**

Oil is a major factor in the performance and service life of any engine. Using the incorrect oil may damage the engine and void the warranty. To avoid causing engine damage and voiding the warranty, check and change oil as required using the correct engine oil.

1. Check oil with the pump on a level surface and the engine off.
2. Remove the dipstick by unscrewing the gray cap and pulling it out, then wipe it clean.
3. Place clean dipstick into engine, but do not thread it in, rest it on the filler neck.
4. Remove the dipstick from the filler neck and check oil level. Oil level should be at the high mark on the dipstick.
5. If level is low, add the recommended oil to the crankcase until the level reaches the upper limit on the dipstick. See the engine manual for recommended oil.
6. Install the dipstick and tighten cap by threading it into the filler neck.

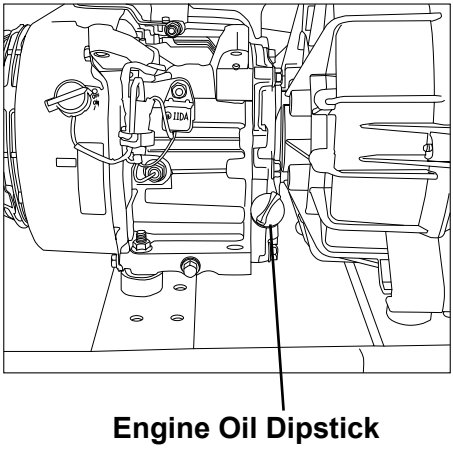

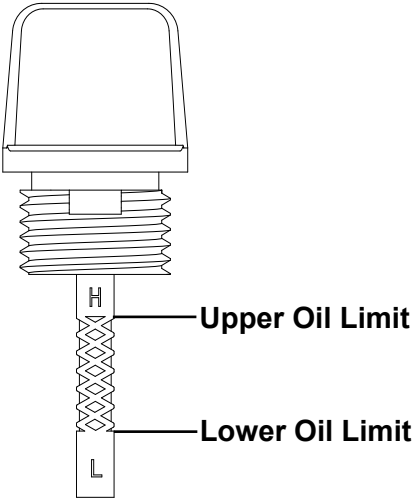

Checking Fuel

WARNING **REFUELING**

Gasoline is highly flammable and gasoline vapors are extremely explosive. Fire and explosions can cause severe burns and/or death. Keep gasoline away from flames, sparks, and other ignition sources. Refuel outdoors in a well-ventilated area with the engine stopped and cool. Wipe up any spilled gasoline and allow engine to dry before starting. Keep a fire extinguisher handy while refueling. Do not operate engine with leaks in the fuel system. Do not store gasoline near other flammable materials.

NOTICE **OLD FUEL**

Old gasoline can create deposits that clog fuel systems causing hard starting and poor performance. Damage caused by old fuel is not covered by warranty. To minimize deposits, avoid old fuel related performance issues, and prevent costly repair work, do not use gasoline that is older than 30 days.

NOTICE **ALCOHOL BLENDS**

Using gasoline with an alcohol blend greater than 10% (E10) will damage the engine. Damage caused by using an alcohol blend of 15% (E15), 85% (E85), or any other alcohol blend higher than 10% (E10) is not covered under warranty. To avoid engine damage caused by an alcohol blend that is too high, use gasoline with 10% (E10) alcohol or lower.

NOTICE **FUEL ADDITIVES**

The use of fuel system cleaning additives can damage the engine and fuel systems. Damage caused by the use of fuel system cleaning additives is not covered by warranty. To avoid engine and fuel system damage, do not use any fuel system cleaning additives.

CAUTION **FUEL TANK PRESSURE**

Gasoline vapor can build up inside the fuel tank creating pressure. This pressure may increase when the engine is hot from running. Opening the fuel tank under pressure can cause rapid escape of flammable vapors and possible fuel spills that may ignite from contact with hot engine surfaces resulting in burn hazard. To avoid these hazards, always allow the engine to cool for at least 2 minutes before removing fuel cap and loosen the fuel cap slowly to relieve any pressure in the tank.

NOTICE **GASOLINE STORAGE**

It is important to prevent gum deposits from forming in essential fuel system parts, such as the carburetor, fuel filter, fuel hose or tank during storage. Alcohol-blended fuels (also called gasohol, ethanol, or methanol) attract moisture, which leads to separation and formation of acids during storage. Acidic fuel and gum deposits can damage the engine's fuel system while in storage. Effects of old, stale, or contaminated fuel are not covered under warranty.

NOTE: Using a fuel stabilizer (sold separately) when storing gasoline will help prevent problems related to ethanol alcohol in outdoor power equipment engines. Always follow the instructions provided by the fuel stabilizer manufacturer to mix and use correctly.

NOTICE **DO NOT OVERFILL FUEL TANK**

Overfilling the fuel tank can result in carbon canister damage (if equipped), poor engine performance, and void the warranty. To avoid these hazards, do not fill the fuel tank above the maximum level.

1. Check fuel with the pump on a level surface and the engine off.

2. Do not use gasoline that is older than 30 days. Use only fresh, clean regular unleaded gasoline with a minimum octane rating of 87. Do not mix oil with gasoline. Do not use gasoline that contains more than 10% ethyl alcohol. E15, E20, and E85 are not approved fuels and should not be used.

3. Do not fill the fuel tank above the maximum fuel level so as to allow room for fuel expansion. For fuel capacity see the SPECIFICATIONS section of this manual.

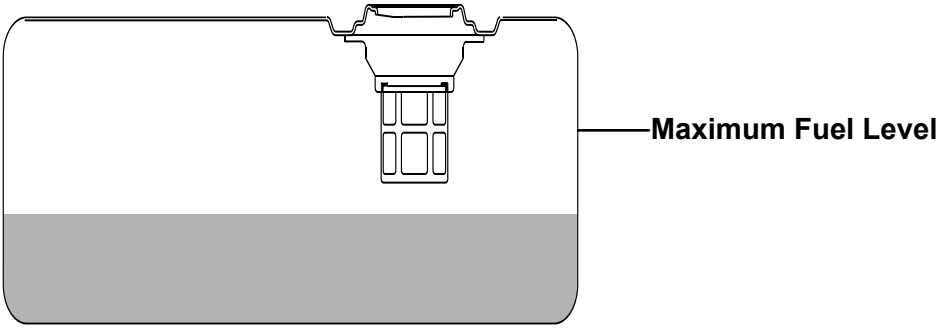

CONNECTING HOSES

The suction and discharge hoses are not included. Assemble them as per the manufacturer instructions. Make sure all connections are sealed properly. Air leaks may cause the pump to lose prime and not pump at full efficiency.

Hose Placement

1. Place the pump on a level surface.

2. Completely immerse strainer but do not rest it on the bottom of the water source.

3. Do not exceed the maximum suction head and total head lifts as listed in the SPECIFICATIONS section of this manual.

NOTE: The suction head lift should always be less than the discharge head lift.

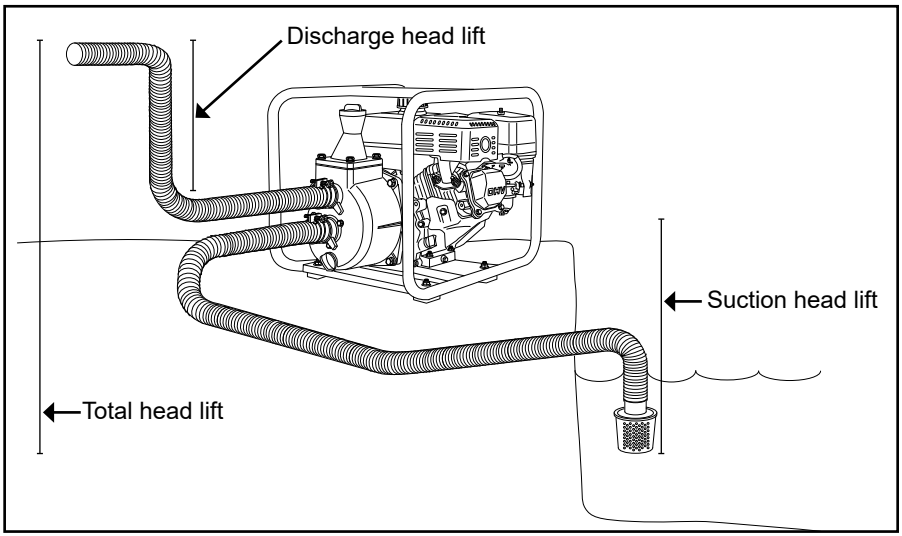

NOTE: This image is an example of hose layout and does not represent a specific model.

PRIMING THE PUMP

NOTICE **PUMP PRIMING**

This pump will not prime when dry. Running the pump dry without priming can damage the pump assembly and seals. Damage caused by running dry is not covered under warranty. To avoid damaging the seals and pump assembly, do not run the pump when it is dry without priming.

Priming the pump

1. Remove primer funnel cover.

2. Carefully fill the pump with the chemical you will be pumping.

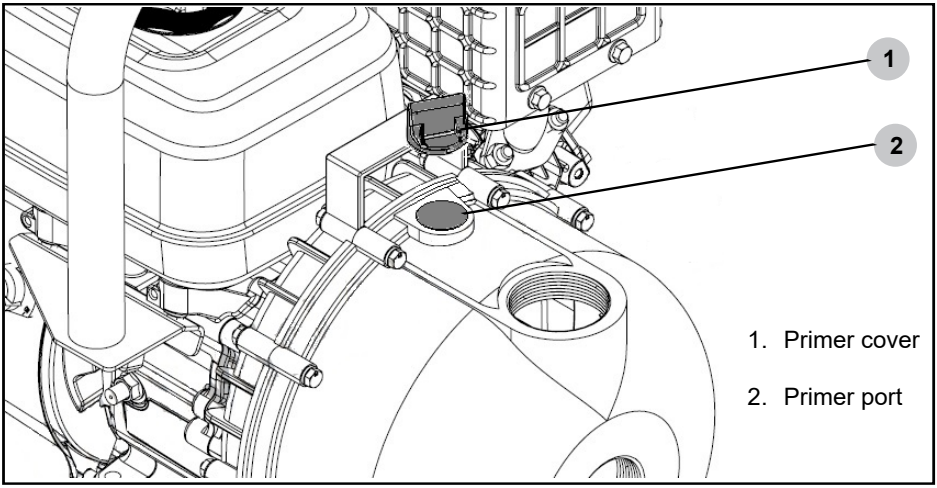

DANGER **VOLATILE LIQUIDS**

Pumping volatile, flammable, or corrosive liquids could cause pump damage, fire, or explosion resulting in severe injury and/or death. To avoid these hazards, do not attempt to pump volatile, flammable, or corrosive liquids.

Starting the Engine

1. Complete the steps in the OPERATING CHECKLIST, CONNECTING HOSES, and PRIMING THE PUMP sections of this manual before starting the engine. Failure to do so could damage your engine and pump.

WARNING **OPERATING CHECKLIST**

Attempting to start the engine incorrectly or using the pump incorrectly can result in engine and/or pump damage, and may cause serious injury or death. To avoid engine and/or pump damage and serious injury or death be sure to read, understand, and follow the steps outlined in the OPERATING CHECKLIST section of this manual before starting the engine, and follow all the guidelines for proper use of the pump.

2. Turn the engine ignition switch to the ON position.

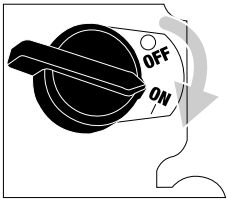

3. Turn the engine fuel valve to the ON position (if equipped).

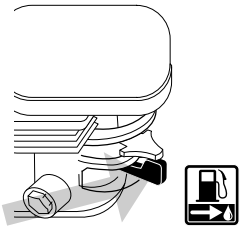

Engine fuel valve

4. Adjust choke as needed:

NOTE: The starting position of the choke will vary depending on the engine temperature. If starting a cold engine, move the choke lever towards the closed position. If starting a warm engine, move the choke lever towards the open position.

CLOSED

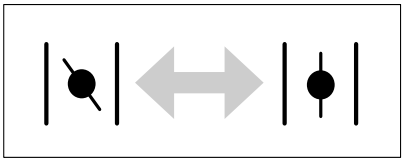

OPEN

5. Pull the recoil until you feel some resistance, then pull rapidly to start the engine.

WARNING **RAPID RETRACTION**

Rapid retraction (also known as kickback) of the engine recoil starter cord will pull your hand and arm towards the engine faster than you can let go of the handle resulting in sprains, broken bones, lacerations, and/or traumatic amputations. Kickback is caused by damage to the engine crankshaft key, compression release failure, and/or improper starting techniques. To avoid kickback follow the appropriate maintenance schedule, starting instructions, and have repair work done by an authorized service center.

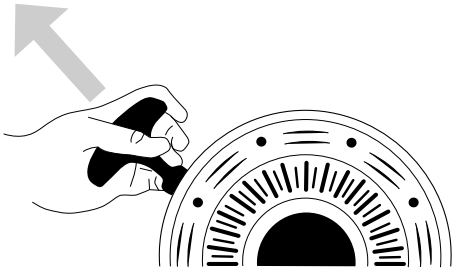

6. Adjust choke as needed:

NOTE: Once the engine starts, slowly move the choke lever to the OPEN position as the engine warms. If the engine falters, move the choke lever toward the CLOSED position until the engine is warmed up.

CLOSED 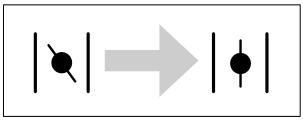 **OPEN**

SHUTTING OFF ENGINE

1. Turn the ignition switch to the OFF position.
2. Turn the engine fuel valve to the OFF position (if equipped).
3. Allow the engine to cool completely before handling and storing.

MAINTENANCE

For safety reasons, the manufacturer recommends all pump service and repairs be performed by an authorized service center. All warranty replacements or repairs must be performed by an authorized distribution or service center. To find an authorized service center near you, to make a warranty claim, or for authorized warranty repair, call 1-877-362-4271 or email cservice@fna-group.com.

It is the responsibility of the owner and/or operator to have all scheduled maintenance completed before operating the pump. Be sure to follow the inspection and maintenance recommendations as listed in all the manuals that came with this unit.

Pump maintenance

Maintenance: Before each use, check pump for loose or damaged parts, and any other condition that may affect proper operation. Be sure all safety guards are in place and in proper working order. Inspect all air vents and cooling slots to ensure they are clean and unobstructed. Repair or replace all damaged or defective parts immediately. For safety reasons, the manufacturer recommends all pump service and repairs be performed by an authorized service center. To find an authorized service center near you, obtain information about how to make a warranty claim, or to make arrangements for authorized warranty repairs, please call 1-877-362-4271 or email cservice@fna-group.com.

CAUTION **MAINTENANCE**

Improper engine and pump maintenance as well as failing to correct problems before operation could void the warranty and may result in property damage and injury. To prevent these hazards, follow the maintenance procedures listed in this manual and any other manual that came with this product.

Exterior Pump Cleaning: Always clean the pump with the engine off and cool. To clean the pump, first use an air compressor set at 25 PSI to clear dirt and debris from the pump surfaces, vents, and cooling slots. Next, wipe the exterior clean with a damp cloth.

NOTICE **CLEANING**

Water can damage the pump engine components if allowed to enter through cooling slots or other holes. Damage caused by water intrusion is not covered under warranty. To avoid engine water damage, do not use a pressure washer, garden hose, or any other sources of running water to clean the pump engine, and never submerge the pump engine in any liquids.

NOTICE **CHEMICAL CLEANERS**

Using chemical cleaners and/or corrosive liquids can damage the pump seals and internal components. Damage caused by chemical cleaners and corrosive liquids is not covered under warranty. To avoid damaging pump seals and components, do not use chemical cleaners and corrosive liquids to clean the components inside of the pump housing.

Interior Pump Cleaning: Keeping the pump clean will allow it to perform its best and prolong the life of the pump. Do not store the pump without draining the pump housing. Do not allow chemicals to dry inside the pump housing. Clean your pump after each use by following the steps below.

1. Once you have completed pumping, place a container below the pump that is approved for the chemical you were pumping.
2. Remove the suction and discharge hoses. Drain them into an approved container.
3. Remove the drain plug (1) at the bottom of the pump and allow all of the chemical to drain into the container.
4. Remove the primer funnel cover (2).
5. Using fresh, clean water only, flush the pump allowing it to be completely washed out.
6. Insert the drain plug and primer funnel cover; hand tighten.
7. Dispose of all discarded chemical and rising water responsibly.

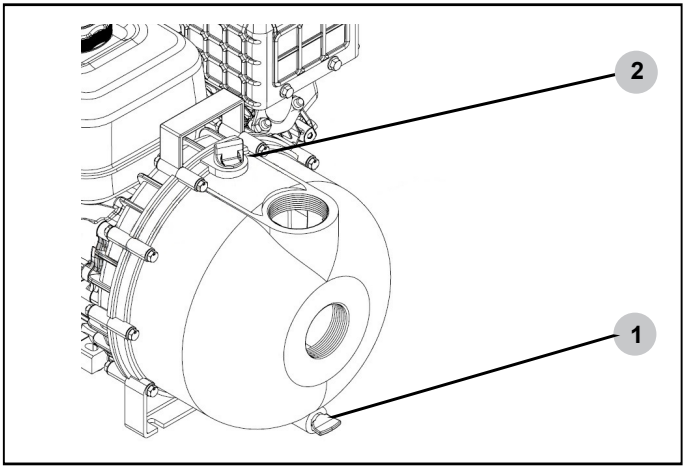

WARNING **RESPONSIBLE USAGE**

This pump was designed for safe usage with approved chemicals. This pump should never be used for pumping fluids that are for human consumption. Once this pump has been used to convey any chemical, it should never be used to pump water again, be it for flood removal or irrigation usage. Even after cleaning, a chemical residue may be left that could harm aquatic or plant life. Always use the chemical pump responsibly by following all local, state and federal environmental laws and regulations.

Engine Maintenance

Before each use, check engine for loose or damaged parts, signs of oil or fuel leaks, and/or any other condition that may affect proper operation. Always keep all safety guards in place and in proper working order. Repair or replace all damaged or defective parts immediately.

For safety reasons, the manufacturer recommends all engine service and repairs (including emission control devices and systems) be performed by an authorized service center. All warranty replacements or repairs must be performed by an authorized distribution or service center. To find an authorized service center near you, obtain information about how to make a warranty claim, or to make arrangements for authorized warranty repairs, please call 1-877-362-4271 or email cservice@fna-group.com.

For all other information on engine maintenance, refer to the engine manual.

STORAGE AND TRANSPORTATION

NOTICE **GASOLINE STORAGE**

It is important to prevent gum deposits from forming in essential fuel system parts. Alcohol-blended fuels (also called gasohol, ethanol, or methanol) attract moisture, which leads to fuel separation and the formation of acids during storage. Acidic fuel and gum deposits can damage the engine's fuel system. Effects of old, stale, or contaminated fuel are not covered under warranty.

NOTE: Using a fuel stabilizer (sold separately) when storing gasoline will help prevent problems related to alcohol blended fuels in outdoor power equipment engines. Always follow the instructions provided by the fuel stabilizer manufacturer to mix and use correctly.

Storing for two months or less

1. Fill fuel tank per the OPERATING CHECKLIST section of this manual then add a fuel stabilizer per the manufacturer's recommendations.

2. Start the engine per the STARTING section of this manual and run it for ten (10) minutes to allow the stabilized fuel to circulate through the entire fuel system.

3. With the engine still running, turn the fuel valve to the OFF position and allow the engine to run until it stalls from lack of fuel.

4. Allow the engine to cool completely.

5. Drain and clean the pump per the MAINTENANCE section of this manual.

6. Store the pump in a clean, dry area out of direct sunlight.

Storing for more than two months

1. Make sure the engine is completely cool.
2. Turn the fuel valve to the ON position.
3. Remove all the fuel from fuel tank, fuel lines, and carburetor by loosening the drain screw at the bottom of the carburetor, and draining fuel into an appropriate container.
4. Turn the fuel valve to the OFF position.
5. Change the engine oil.
6. Remove any dirt and debris from the area around the spark plug, then use a spark plug socket or wrench to remove the spark plug.
7. Pour .5 ounces (15 ml) of fresh oil into the engine combustion chamber, then slowly crank the engine by pulling the recoil two (2) times to distribute oil and lubricate the cylinder.
8. Install the spark plug.
9. Drain and clean the pump per the MAINTENANCE section of this manual.
10. Store the pump in a clean, dry area out of direct sunlight.

Transportation

WARNING **TRANSPORTATION**

Leaving the pump in an enclosed space where temperatures can rise on a transport vehicle may cause fuel to vaporize and possibly explode. Fire and explosions can cause severe burns and/or death. To avoid leaking or vaporizing fuel, secure the pump in a well ventilated area out of direct sunlight and other heat sources. Do not transport the pump on rough roads unless the fuel has been drained beforehand.

1. Turn the fuel valve to the OFF position.
2. Turn the engine control switch to the OFF position.
3. To prevent fuel spillage when transporting, keep the pump upright on a level surface.
4. Secure pump with straps or tie downs to prevent tip over and damage from sliding.

NOTE: Do not operate the pump while it is on the transport vehicle.

SPECIFICATIONS

Model Number: SCP71008 / Item Number: 71008

Pump Set	Flow Rate	195 GPM / 886 liters per minute
	Inlet Diameter	2 inches / 5.08 centimeters
	Outlet Diameter	2 inches / 5.08 centimeters
	Suction Head Lift	25 feet / 7.62 meters
	Total Head Lift	98 feet / 29.87 meters
Engine Specifications	Fuel Capacity	0.7 Gallons / 2.65 liters
	Engine Model	CRX® 208cc
	Displacement	208cc
	Start Style	Recoil

Model Number: SCP71009 / Item Number: 71009

Pump Set	Flow Rate	195 GPM / 886 liters per minute
	Inlet Diameter	2 inches / 5.08 centimeters
	Outlet Diameter	2 inches / 5.08 centimeters
	Suction Head Lift	25 feet / 7.62 meters
	Total Head Lift	98 feet / 29.87 meters
Engine Specifications	Fuel Capacity	0.7 Gallons / 2.65 liters
	Engine Model	CRX® 208cc
	Displacement	208cc
	Start Style	Recoil

WARRANTY INFORMATION

Warranty Terms:

The FNA Group warrants to the original purchaser this product shall be free from defects in materials and workmanship as follows. The FNA Group agrees to repair or replace, at their discretion, any defective pump or frame free of charge for three (3) years from the date of purchase. Any of the described parts of this product found by the FNA Group to be defective in material or workmanship within these warranty periods will be repaired or replaced at no charge to original purchaser by an authorized service center. This warranty coverage extends to the original purchaser only and is non-transferable. A transfer of ownership of this product will void this warranty.

An authorized service center must make all warranty repairs. Any defective product(s), including any defective part(s), covered under the above outlined warranty terms must be returned to an authorized service center along with proof of original purchase. No warranty claim can be substantiated without The FNA group. The FNA Group will not pay or reimburse any shipping and/or transportation charges for any warrantable product(s) or part(s) to be sent to an authorized service center, or back to the purchaser from the service center. All shipping and/or transportation charges are the sole responsibility of the product owner. To locate the authorized service center nearest to you, contact customer support at 1-877-362-4271 or email cservice@fna-group.com.

Under these warranty terms, the FNA Group is limited to repairing or replacing defective parts and assumes no other obligation, nor does the FNA Group allow or authorize anyone else to assume them for any other obligations. Because the FNA Group's responsibility in respect to any and all warranty claims is limited to making the required repairs or replacements. No claim of breach of warranty shall be cause for cancellation or rescission of the contract of sale of any product manufactured by the FNA Group.

This warranty does not cover any product manufactured by the FNA Group that has been subject to abuse, misuse, neglect, negligence, accident, the effects of corrosion or erosion, or damage caused by use that is in any way contrary to the operating instructions as specified in this manual. This warranty also does not apply to any product damaged as the result of improper maintenance, the use of parts not compatible with the product, or to any product that has been altered or modified from stock in any way.

In addition, this warranty does not extend to repairs made necessary by normal wear, routine maintenance or any related parts such as tune-ups, spark plugs, carburetor adjustments, ignition adjustments, filters, oil changes, recoil starter ropes, electric motor brushes, cotter pins, wheels, gaskets, valves, pistons or any other parts considered to be wear items.

This warranty gives you specific legal rights. You may also have other rights that vary from state to state. This warranty applies to a product manufactured by the FNA Group that is sold in the United States and Canada.

Warranty Limitations:

The foregoing warranty is exclusive and in lieu of all other warranties whether written, oral, expressed, or implied. There are no warranties of merchantability or fitness of any product for a particular purpose. The FNA Group's only liability shall be the repair or replacement of parts as stated above. In no event shall the FNA Group be responsible for any losses or damages that are indirect, consequential, punitive, special, exemplary, or for economic loss, lost revenues, lost profits, or lost business opportunities, regardless of whether such liability is based on breach of contract, tort, strict liability, breach of warranties, failure of essential purpose or otherwise, or is a direct result of the FNA Group's own actions or inactions. Because some states do not allow limitations on how long an implied warranty lasts, the above limitation may not apply to you.
The FNA Group assumes no responsibility for incidental, consequential, or other damages including,

but not limited to, expenses related to transporting the product to or from an authorized service, a mechanic's travel time, any telephone or telegram charges, the rental of a like product while the warranty service is being performed, any other travel time or expenses, loss or damage to personal property, loss of revenue, loss of use of the product, loss of time, or any other inconvenience. Some states do not allow the exclusion or limitation of incidental or consequential damages, so the above limitation or exclusion may not apply to you.

If you have any questions regarding this warranty or the rights and obligations it describes, please contact customer support at 1-877-362-4271 or email cservice@fna-group.com.

THIS PAGE WAS INTENTIONALLY LEFT BLANK

READ THIS MANUAL CAREFULLY BEFORE OPERATION

Failure to follow the instructions and safety precautions in this manual can result in property damage, serious injury and/or death.

SAVE THIS MANUAL FOR FUTURE REFERENCE

Part Number 7117700 / ENGLISH

REV 2 - 07/2022