Green Breeze

J&D Manufacturing

GREENHOUSE BASKET FAN RECIRCULATION SOLUTIONS

Greenhouse Ventilation Solutions

J&D's extensive line of greenhouse fans and other products have been helping cultivators for decades.
We have what you need to produce more powerful blooms.

Types of Circulation

Horizonal Airflow (HAF): Based on a principle that air moving in a consistent pattern only needs enough energy to overcome turbulence and friction losses to keep it moving, HAF has become a standard in greenhouses. The benefits of HAF include a nice mixing of air. As air moves horizontally through the greenhouse from one end to the other, the temperature will be consistent. It also helps transport heat that comes from one spot in the greenhouse to the entire house quickly. Stratification will also be decreased.

Destratification: Destratification fans circulate air in a building, moving it from the ceiling to the floor, creating a more even temperature distribution. This improves the comfort of the environment throughout and provides immediate energy savings. Destratification fans reduce the stress put on heating systems, lower the energy usage by up to 50%, and ensure you're up-to-date on the latest environmental "green" codes.

Other Greenhouse Circulation Solutions by J&D

JD360

Ceiling Fan

Drum Fans

EZ-Breeze

J&D's EZ-Breeze HAF Fan is a high efficiency air circulator that effectively cools people, plants, animals and industrial equipment. The EZ-Breeze greenhouse fan creates a uniform temperature throughout your building to reduce heating costs.

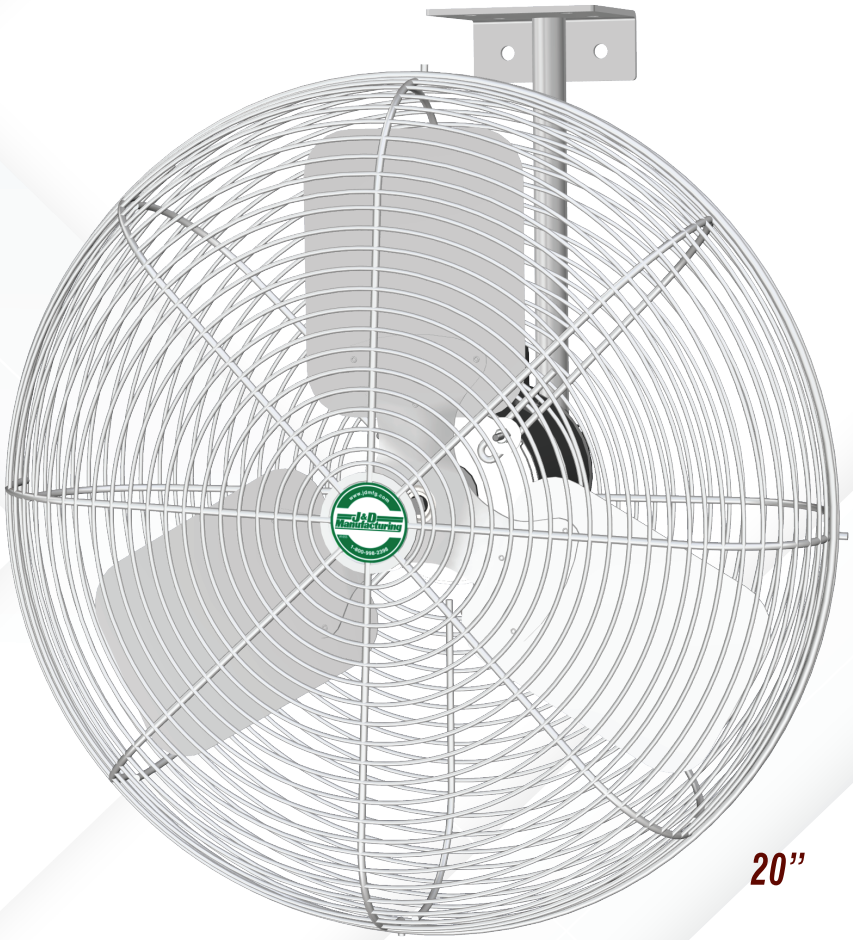

- Direct drive, variable speed motor
- 12” - 24” models available
- Reduces condensation
- Controls insects

No Electrician Needed - Just Plug it in

Green Breeze

The Green Breeze is the most versatile, energy-efficient, best-valued HAF fan on the market today. Create a uniform temperature in your house for higher profit blooms.

12”

- Available in 12”, 20”, 24”, and 36” - Perfect for any size greenhouse!
- Variable speed motors for year-round air circulation
- Attached 10’ cord with 3-prong plug pre-wired for 115 Volts
- The tapered side guard creates a tight air pattern that throws air much farther than conventional basket fans
- Corrosion-resistant, white powder coated guards

No Electrician Needed - Just Plug it in

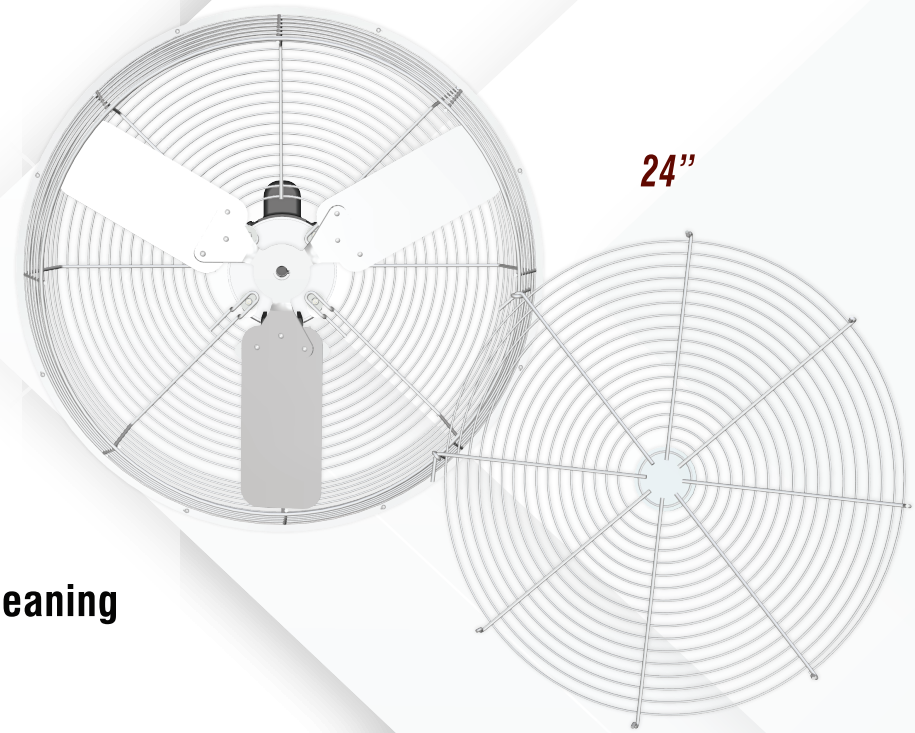

24”

Patented open-front guard

Hinged front guard for easy cleaning and maintenance!

Housing

- Corrosion-resistant, white powder coated guards
- Tapered side guards create a tight air pattern
- Wider gaps minimizes dirt build-up on the guards

Motor

- Maintenance free
- High efficiency
- **2 Year Warranty**

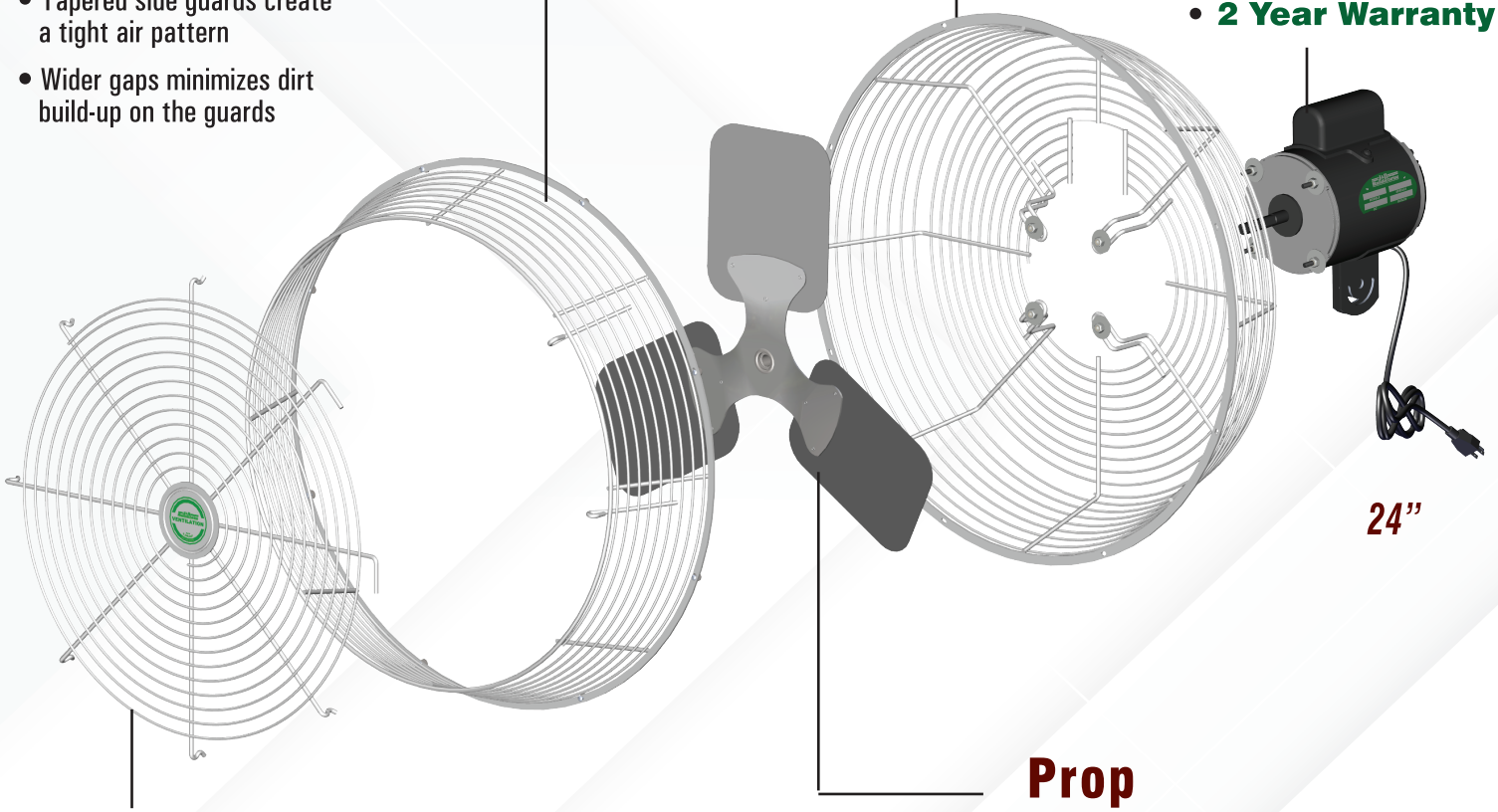

24”

Front Guard

- Heavy-duty
- Patented open-front guard for easy maintenance
- White powder coated to resist rust and corrosion

Prop

- 12”-24” fans have aluminum prop, 36” fan has galvanized prop
- Die-cast aluminum hub

Structure airflow pattern for gutter connected greenhouses

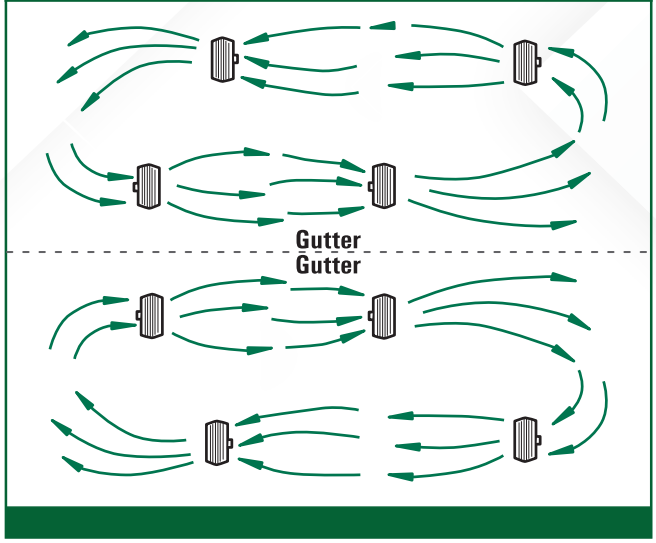

Stainless-Steel Basket Fan

The ultimate in corrosion resistance

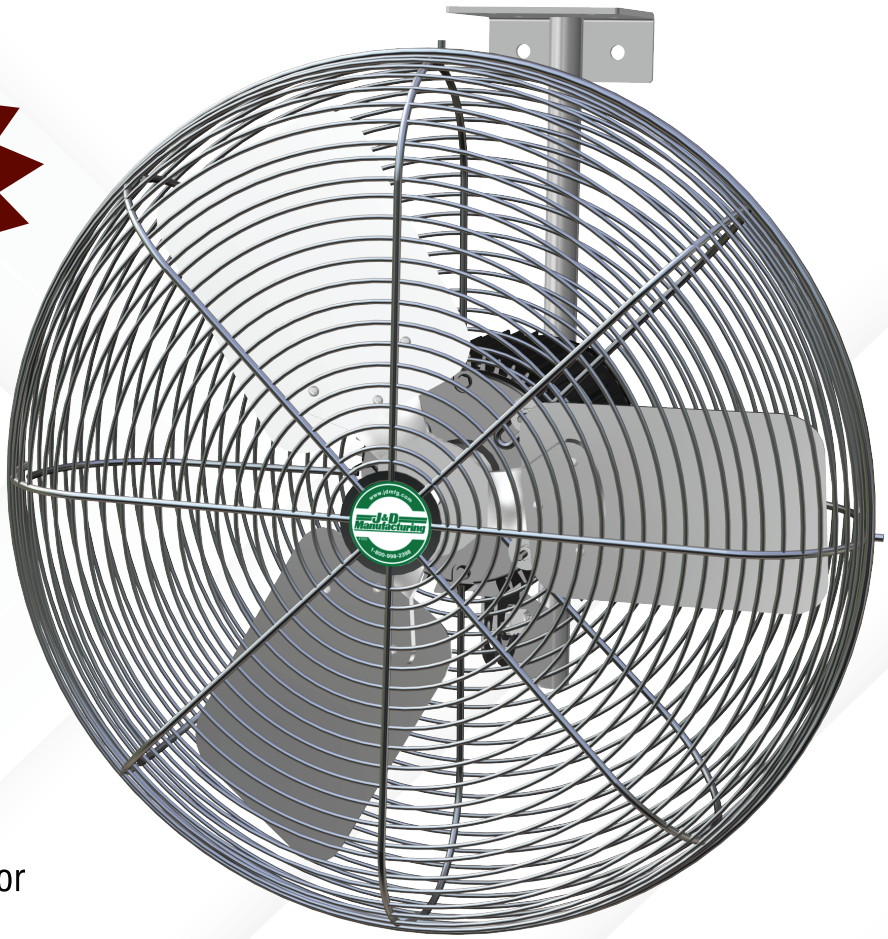

Guard, prop, motor, housing, and hardware are all corrosion-resistant

- Compatible with our misting/fogging lines
- Direct drive, IP66-rated motor with thermal overload protection
- Housing has electrophoretic coating for additional corrosion resistance
- Guard meets OSHA 1910.212(a)(5) requirements allowing this fan to be installed at any height

Features

J&D's IP66-Rated Gold Star Motor

- Dust tight
- Can be washed down from any angle
- Powerful, direct drive

UL507 Rated Fans

Wall, Ceiling, or Pole Mount Fans

Available in 14” & 18”

Perfect for greenhouses, marinas, loading docks, and other wet/humid locations

Oscillating Wall Fan

Available in 24” & 30”

The Indoor/Outdoor POW (Premium Outdoor Waterproof) fans are three-speed, waterproof fans with quiet operation. The UL507 Certified fans can be mounted almost anywhere, are corded, and are pre-wired for 115 Volts, so no electrician is needed.

- Plug-in ready
- Rated for use with our misting/fogging products to increase cooling abilities
- Sizes perfect for any location!
- UL507 fans can be sprayed down to remove dust and dirt build up

Stainless-Steel Basket Fan

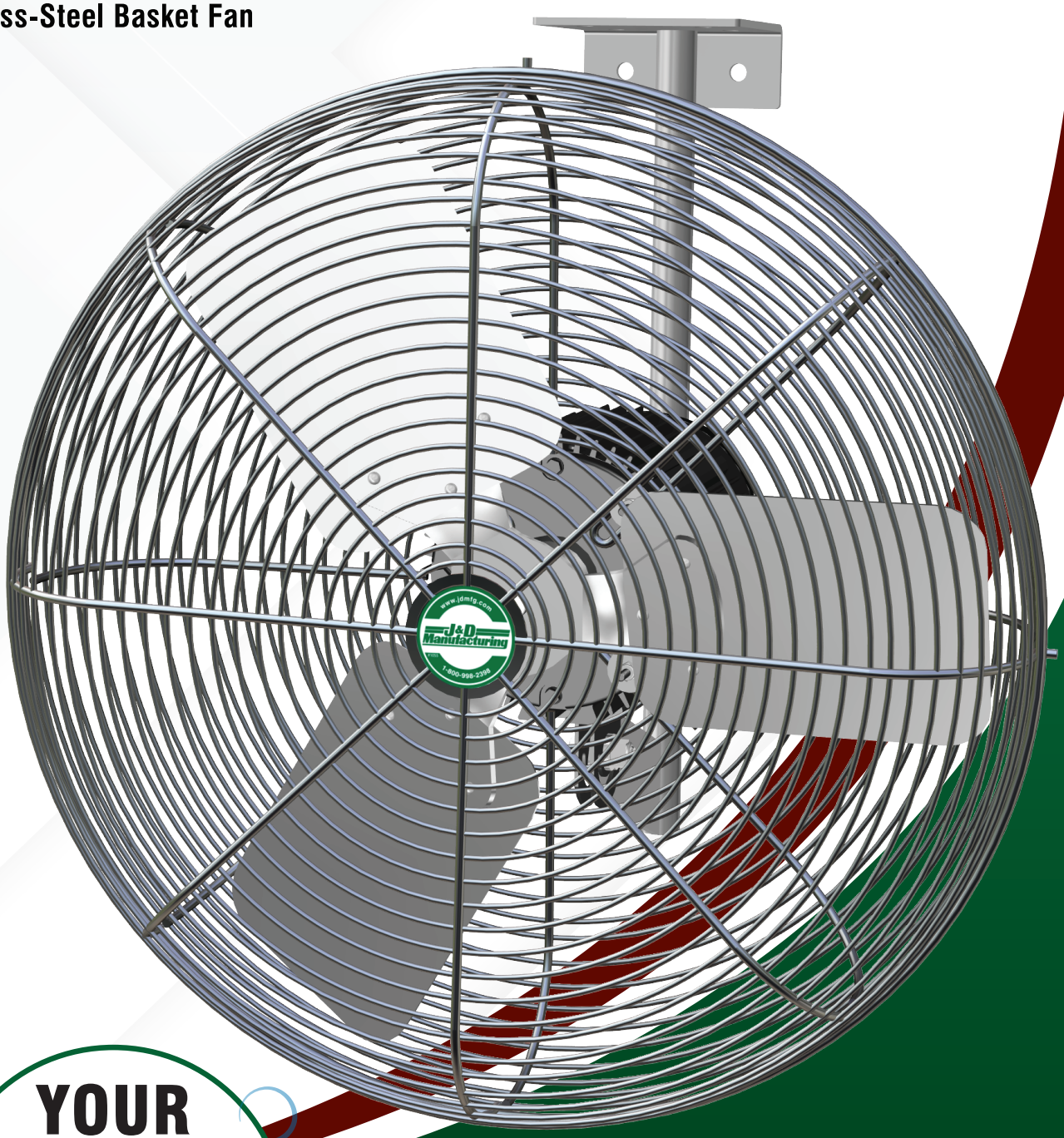

YOUR VENTILATION EXPERTS

J&D Manufacturing

J&D Manufacturing

6200 US-HWY 12, EAU CLAIRE, WISCONSIN 54701

Family Owned & Operated in Eau Claire, Wisconsin

1-800-998-2398 | www.jdmfg.com