Hornet Outdoors manufactures a number of different sizes, styles, and capacities of Receiver Hitch Products for ATV/UTV's and the Auto, Truck, RV Market.

All Hornet Hitch Products are Made in the USA.

ATV/UTV Hitch

The Hornet U-4043 is a patent pending ATV/UTV 2" hitch designed to be adjustable to accommodate not only towing but cargo carriers, implements and tow hitches that require adjustability vertically and horizontally.

If you'd like to go directly to this product on the web site click here.

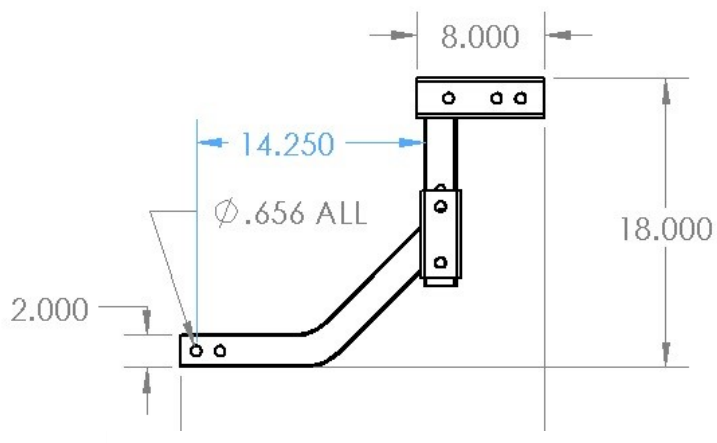

ATV/UTV Hitch

The Hornet U-4044 is an ATV/UTV 2" Hitch Riser/Extender that features a curved bottom to negate ground hang-up.

If you'd like to go directly to this product on the web site click here.

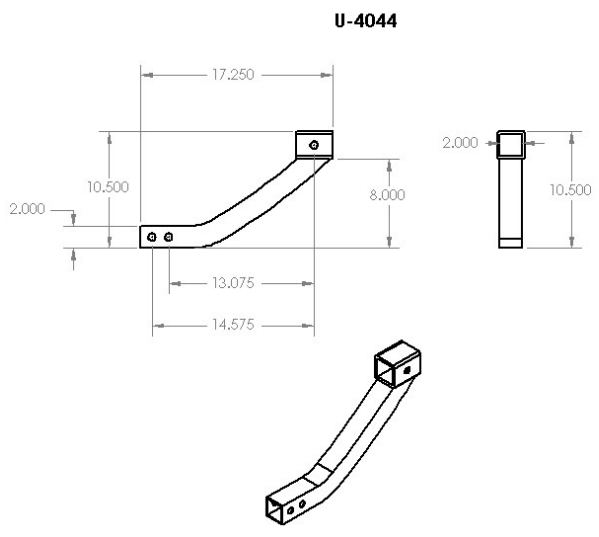

ATV/UTV Hitch

The Hornet U-4044-2 is an ATV/UTV 1 1/4" to 2" Hitch Riser/Extender/ Converter that features a curved bottom to negate ground hang-up and converts a 1 -1/4" receiver to 2".

If you'd like to go directly to this product on the web site click here.

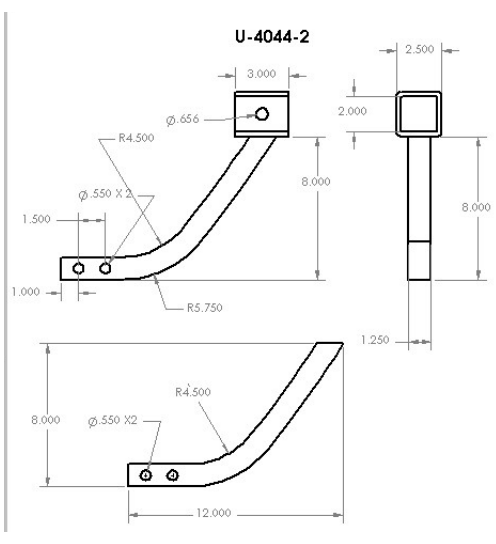

ATV/UTV Hitch

The Hornet U-4044-FP is an ATV/UTV 1 1/4" Hitch Riser/Extender that features a tow plate with 2 holes; one for a ball hitch and the other hole can accommodate a yard cart or other trailer with a y hitch.

If you'd like to go directly to this product on the web site click here.

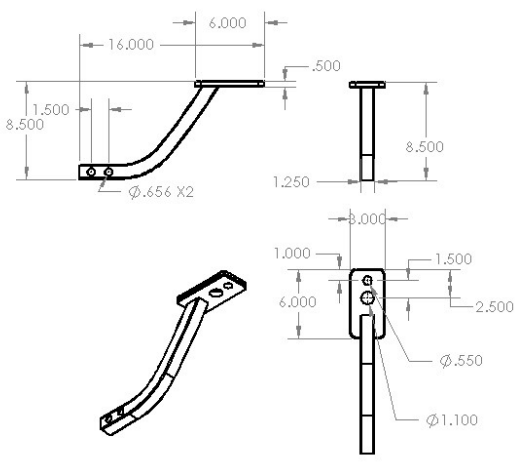

ATV/UTV Hitch

The Hornet U-4053 is an ATV/UTV 1 -1/4" to 2" Hitch Adapter/Extender that features a very short extension; 4.5"

If you'd like to go directly to this product on the web site click here.

ATV/UTV Hitch

The Hornet U-4052 is an ATV/UTV 2" Piggyback. Attach your Hornet Spare Tire Mount to the top and a tow hitch or cargo carrier to the bottom.

If you'd like to go directly to this product on the web site click here.

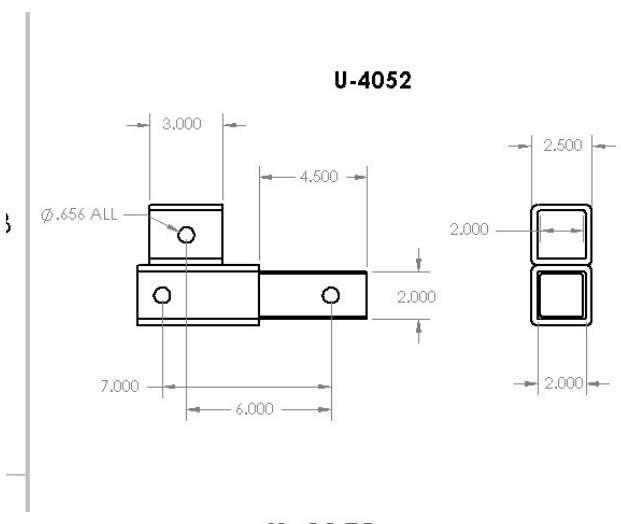

ATV/UTV Hitch

The Hornet U-4051 is an ATV/UTV 2" SHORT Extension. Adds 4.5" to your 2" Receiver.

If you'd like to go directly to this product on the web site click here.

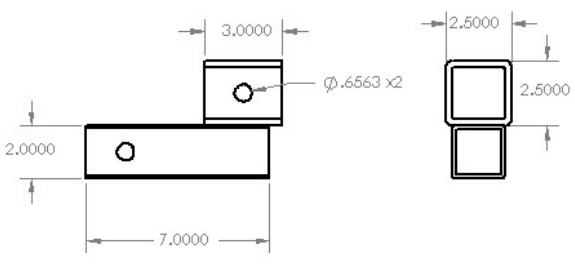

ATV/UTV Hitch

The Hornet U-6043 is an ATV/UTV 1 1/4" Adjustable Receiver hitch that also converts to receiver to 2".

If you'd like to go directly to this product on the web site click here.

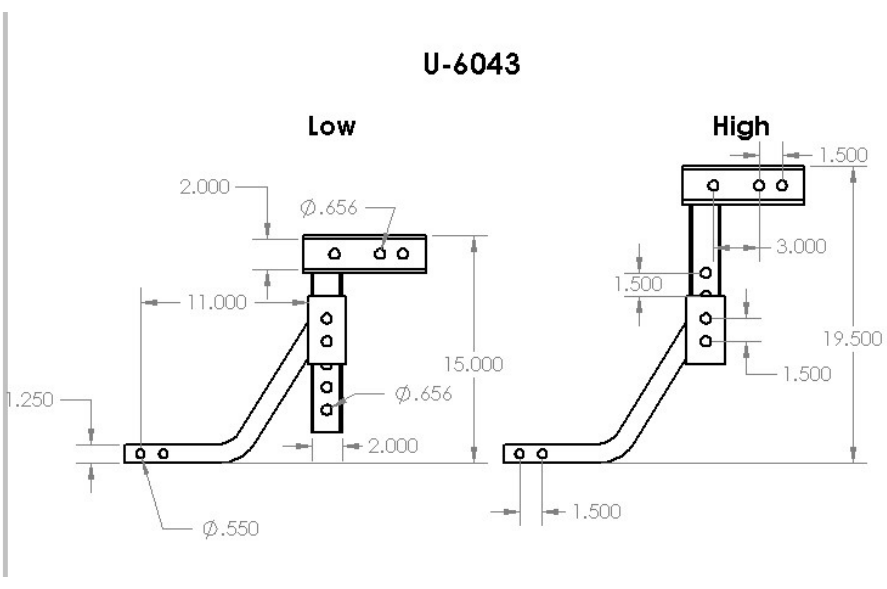

The Hornet U-4200 is an Heavy Duty Adjustable Receiver Hitch for Auto/Truck or for ATV/ UTV use. If you'd like to go directly to this product on the web site click here.
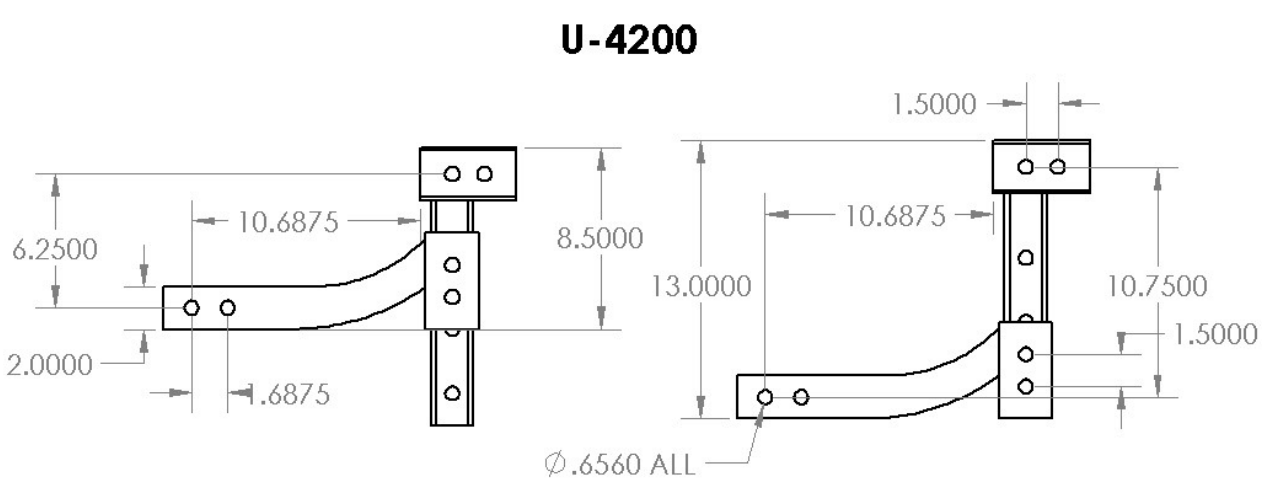
Truck/Auto ATV/UTV Hitch