GROUND SLEEVE
INSTALLATION INSTRUCTIONS

Tools & Material Needed:

- Post Hole Digger/Shovel
- Level
- Tape Measure
- Mixing Container
- 80 lbs. + of Quick Setting Cement
- Approximately 3" of Gravel

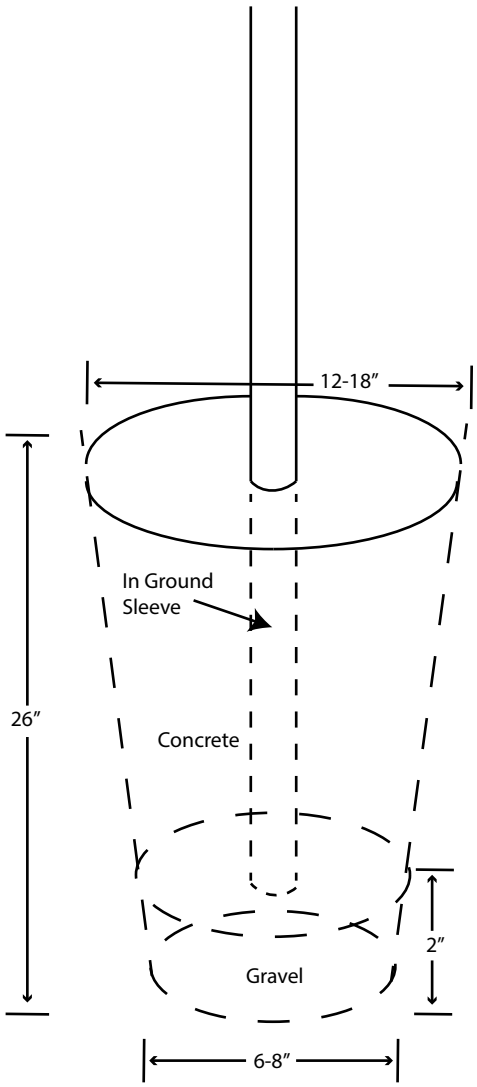

STEP 1: Select flagpole location. Call 811 before you dig. Check for underground sprinklers, water and electrical lines. Make sure your flag has clearance to fly in all directions. Are you too close to the house? Watch the roof!

STEP 2: Dig a hole approximately 26" deep by 12-18" in diameter (26"L x 12-18"W).

STEP 3: Place approximately 3" of gravel in hole to allow for drainage.

STEP 4: Place aluminum ground sleeve into gravel – to prevent concrete from flowing inside. Use blue cap to cover ground sleeve so cement does not get inside sleeve.

STEP 5: Mix cement and pour around ground sleeve. Repeat until hole is filled (the more cement the better). It is OK to have your ground sleeve and inch or two above ground level. Can be filled in with mulch, dirt and/or flower bed.

STEP 6: Carefully insert pole into ground sleeve as cement will be wet . Use a level to make sure pole is straight. Remove pole section after level, concrete must cure for at least 24 hours.

STEP 7: Assemble your flagpole. Please see assembly instructions for the flagpole model that you have.