NORSE

a CH Hanson brand

WOODWORKING CATALOG

2" x 6" Belt & Disc Sander

ITEM# 9681119

NORSE's direct drive combination belt and disc finishing machine will grind, sand, finish, polish, deburr, and contour all types of materials and parts. The direct drive power train with a heavy duty capacitor motor allows the unit to work underload without slowing or bogging down.
Dimensions: 8"D x 14"W x 23"H

- 2" x 42" Belt (also works with 1" x 42" Belt, not included) and 6" PSA disc
- Belt operates in the horizontal or vertical position and is designed for fast easy belt changes
- Both belt and disc come with a tilting worktable. Disc table is slotted to accept the standard miter gauge
- 1-1/2" Dust port for the disc
- Cast base for maximum rigidity

Replacement Sanding Belts:

Item # 9681348 - 2" x 42" x 120 Grit (3pk)
Item # 9681349 - 2" x 42" x 80 Grit (3pk)
Item # 9681350 - 2" x 42" x 50 Grit (3 pk)

4" x 6" Belt & Disc Sander

ITEM# 9681114

Space saving 4" x 6" belt & disc sander fits almost anywhere in your shop. The 4" x 36" abrasive belt operates at 1900 SFPM for aggressive material removal. The belt arm can be adjusted anywhere from horizontal to vertical position depending on your work needs. The 6" disc includes a table for precise sanding of angles and miters or just for finish sanding of cuts.
Dimensions: 15-1/2"D x 14"W x 23"H

- 1/2HP 120V motor easily operates off of household electrical
- Cast aluminum disc table tilts up to 45° for angle sanding
- Miter gauge included

6" x 9" Belt & Disc Sander

ITEM# 9681115

Powerful 6" x 9" belt & disc sander designed for heavy sanding jobs. The 6" x 48" abrasive belt operates at 1836 SFPM for aggressive material removal. The belt arm can be adjusted anywhere from horizontal to vertical position depending on your work needs. The extra large platen area provides a flat sanding surface to handle a variety of jobs. The 9" PSA disc includes a table for precise sanding of angles and miters or just for finish sanding of cuts.
Dimensions: 18"D x 14"W x 23"H

- 1HP 120V 8.0A motor easily operates off of household electrical
- Cast aluminum disc table tilts up to 45° for angle sanding
- Miter gauge included
- Includes a locking switch to prevent unauthorized use

Item #	Motor	Disc Size	Disc RPM	Disc Table	Belt Size	Belt Platen	Belt SFPM	Dust Port	Weight
9681114	1/2HP 120V 4.3A	6"	3600	6-1/4" x 9"	4" x 36"	12" x 4-7/8"	1900	2-1/2"	33 lbs.
9681115	1HP 120V 8.0A	9"	2510	6" x 11-1/2"	6" x 48"	14-1/2" x 6"	1836	2"	72 lbs.

Item #	Motor	Disc Size	Disc RPM	Belt Size	Belt SFPM	Disc Table Size	Belt Table Size	Weight
9681119	1/3HP 120V 3.5A	6"	3600	2" x 42" or 1" x 42"	4400	6-1/8 x 8"	6-3/4" x 9"	32 lbs.

Norse 6" x 9" Belt & Disc Sander with Stand

ITEM# 9681121
Dimensions: 22"D x 26-1/2"W x 55"H

Norse direct drive combination belt & disc machine will grind, sand, finish, polish, deburr, and contour all types of materials and parts. Using a direct drive power train system with a heavy duty capacitor motor allows the unit to work underload without slowing or bogging down. Even though the unit comes with a stand, it can be mounted to a bench. Belt arm operates anywhere from vertical to horizontal positioning.

- Belt operates in the horizontal to vertical position and is designed for fast, easy belt changes
- Both the belt and disc come with tilting work tables that are slotted to accept the included miter gauge
- The cast iron base is oversized for maximum rigidity and support

Item #	Motor	Disc Size	Disc RPM	Disc Table	Belt Size	Belt Table	Belt SFPM	Dust Port	Weight
9681121	1HP 120/240V 9/4.5A 3450 RPM	9"	3450	6" x 12"	6" x 48"	6" x 10"	2700	1-1/4"	115 lbs.

6" x 10" Belt & Disc Sander with Cabinet

ITEM# 9681116

Dimensions: 18"D x 21"W x 60"H

- The 1HP motor is dual voltage 120/240V operation (13.4/6.7A). Prewired 120V
- Locking rocker switch to prevent unauthorized use

6" x 12" Belt & Disc Sander with Cabinet

ITEM# 9681117

Dimensions: 19"D x 23"W x 60"H

- The 1-1/2HP motor is dual voltage 120/240V operation (14/7A). Prewired 120V
- Emergency stop paddle

The Norse combination belt and disc finishing machine is a versatile and economical workshop tool. 4" Dust collection shrouds for both belt & disc operations. The units induction motor is housed in the fully enclosed cabinet. Cast iron tables along with the cast iron body deliver rigidity and vibration free operation.

- Cast iron tables for belt and disc operation tilt up to 45° and include a miter gauge slot
- Miter gauge included
- Belt operates vertically or horizontally and is designed for fast easy belt changes
- 4" Dust port for disc and belt

Item #	Motor	Disc Size	Disc RPM	Disc Table	Belt Size	Belt Platen	Belt SFPM	Belt Table	Weight
9681116	1HP 120/240V 13.4/6.7A	10"	1880	7" x 14"	6" x 48"	16-3/4" x 6-1/4"	1470	6" x 10-1/8"	178 lbs.
9681117	1-1/2HP 120/240V 14/7A	12"	2350	7" x 16"	6" x 48"	16-3/4" x 6-1/4"	1836	6" x 10-1/8"	191 lbs.

12" Disc Sander ITEM# 9681309

Heavy duty cast iron construction makes the Norse 12" disc sander ideal for finishing outside radius of wood, plastics and composite materials. Finish precision angles with the miter gauge and tilting table. Direct drive design with a 3/4HP motor provides the power needed for all of your finishing operations.

Dimensions: 18"D x 21"W x 16"H

- Abrasive wheel brake
- 45° Tilting table with miter gauge slot (miter gauge included)
- Balanced cast iron disc
- 12" PSA Disc

Item #	Motor	Disc Size	Disc RPM	Disc Table	Table Tilt	Weight
9681309	3/4HP 120V 8A	12"	1720	16" x 8-3/8"	0 to 45°	65 lbs.

Norse Disc Sander with Cabinet

16" ITEM# 9681310

Dimensions: 28"D x 23"W x 45"H

- Balanced cast iron 16" disc
- Heavy duty steel floor cabinet with storage

20" ITEM# 9681311

Dimensions: 28"D x 28"W x 47"H

- Balanced cast iron 20" disc
- Heavy duty steel floor cabinet with storage

Norse's high performance disc finishing machine is built to handle general purpose to precision finishing applications. Available in both 16" and 20" disc sanders with cabinets. The increased worksurface area quickly finishes larger workpieces. Safety electrical system: drum start/stop/forward/reverse switch and ON/OFF push button power switch with keyed lockout and emergency stop button with electronic brake.

- Direct drive design with oversized draft shaft and sealed ball bearings
- 45° Tilting table with miter gauge slot (miter gauge included)
- Adjustable disc guarding for safe operation

Item #	Motor	Disc Size	Disc RPM	Disc Table	Table Tilt	Dust Port	Weight
9681310	1.5HP 115V 17.8A	16"	1750	18-1/2" x 8-1/2"	-5° to 45°	4"	267 lbs.
9681311	2HP 230V 11.2A 1PH	20"	1750	23" x 8-1/2"	-5° to 45°	4"	314 lbs.

Norse Horizontal Vertical Edge Sander

The Norse edge sanders help provide the perfect finish to long edge applications such as doors, cabinet doors, picture frames and molding. The sanding belt can be tilted from 0° to 90° with a simple lever adjustment. The table adjusts up and down to utilize the entire sanding belt width. A special table is included for sanding radial edges using the sanding belt drive drum.

ITEM# 9681120
Dimensions: 29"D x 26"W x 48"H

- 6" x 48" Abrasive Belt
- Belt guard with dust port opens to allow radial sanding utilizing the drive drum
- Workstop included

ITEM# 9681118
Dimensions: 51"D x 26-1/2"W x 44"H

- 6" x 89" Abrasive Belt
- Extension table used for radius sanding adjusts up and down to use the entire width of the belt
- Adjustable fence included for horizontal sanding support
- Miter Gauge included

Item #	Motor	Belt Size	Belt Speed SFPM	Tilt	Platen	Table Size	Table Adjustment	Dust Collection	Weight
9681120	3/4HP 120V 8.0A	6" x 48"	1950	0° to 90°	17" x 6"	17-1/4" x 10"	Up & Down	2-1/2"	98 lbs.
9681118	1-1/2HP 120V 15A	6" x 89"	1800	0° to 90°	31" x 6"	30" x 10"	Up & Down	4"	257 lbs.

NORSE Bench Grinder w/Light

6" **ITEM# 9682060** - Dimensions: 10"D x 13"W x 13"H

8" **ITEM# 9682080** - Dimensions: 10"D x 16"W x 16"H

NORSE bench grinders are a staple in every garage or shop. They provide smooth quiet power for all grinding, cleaning, deburring, chamfering and sharpening jobs. Dynamically balanced rotors and sealed bearings minimize vibration and ensure smooth running. The flex lamp with an independent switch allows for set up with the wheels running.

- 8" Variable speed unit operates from 2000 to 3450 RPM
- Flexible lamps with independent switch (40W bulb not included)
- Eyeshields, spark arrestors and adjustable tool rests included
- 6" Single speed grinder includes 2 abrasive wheels, 36 & 60 grit
- 8" grinder includes a 60 grit abrasive wheel and a 8" crimped wire wheel

Item #	Motor	Wheel Diameter	Grit	Face	Arbor Hole	Max RPM	Wheels C-C	Weight
9682060	1/3 HP 120V 2.1A 60Hz	6"	36 & 60	3/4"	1/2"	3450	13"	21 lbs.
9682080	1/2 HP 120V 5.0A 60Hz	8"	60 & Wire Wheel	1"	5/8"	2000-3400	16"	38 lbs.

NORSE Bench Buffer

6" **ITEM# 9682119** - Dimensions: 8"D x 18"W x 8"H

8" **ITEM# 9682120** - Dimensions: 8"D x 21"W x 8"H

Easily remove scratches and other imperfections, bring out the natural luster of your workpiece and effectively clean and polish a wide variety of materials. Both units are equipped with a strong, powerful motor that provides the necessary torque for startup and operation under load. (Buffing compounds required, but not included)

- Large diameter armature shaft with shielded bearings for smooth operation
- Extra long shafts to accept multiple buffing wheels
- Includes 1 spiral and 1 soft buffing wheel
- Locking rocker switch to prevent unauthorized use

Item #	Motor	Spiral Buff	Soft Buff	Arbor Shaft	Max RPM	Wheels C-C	Weight
9682119	1/2 HP 120/240V 5.0A/2.5A 60Hz	1-Included	1-Included	1/2"	3450	14-1/2"	21 lbs.
9682120	3/4 HP 120/240V 8/4.0A 60Hz	1-Included	1-Included	5/8"	3450	15-1/2"	23 lbs.

Norse 8" Bench Top Drill Press

ITEM# 9680202

This practical 8" drill press combines performance and economy into one. The powerful 1/3HP motor provides speeds from 760 to 3070 RPM utilizing step pulleys for a variety
of operations and materials. Cast iron and steel construction for rigidity and long life.
Dimensions: 17"D x 8"W x 23"H

- Front mounted safety switch with paddle for ON/OFF
- Cast iron table swivels 360° around the column as well as tilts left and right
- JT33 1/2" Chuck and key with key storage on the drill press head
- Center hole in the table for through drilling
- Positive locking drill depth stop for repetitive operations

Norse 33" Bench Top Radial Arm Drill Press

ITEM# 9680203

An extended reach, tilting drill head is ideal for large or odd-shaped workpieces. The table tilts 45° left or right allowing easy machining of holes at almost any angle. The head tilts 90° to the left and 45° to the right. The head of the drill press moves 12-1/2" forward or backward.
Dimensions: 13"D x 32"W x 32"H

- Durable cast iron head, table and base
- Rack and pinion table movement
- 1/2" Center hole in table for through drilling with 1/2" through slots in table and base for mounting/clamping workpiece
- Includes 5/8" chuck and key JT3 Taper
- Front mounted safety switch with paddle for ON/OFF

Item #	Motor	Swing	Spindle Speeds	RPM	Spindle Taper	Spindle Travel	Table Dimensions	Weight
9680202	1/3HP 120V 2.5A	8"	5	760 to 3070	JT33	2"	6-1/4 x 6-1/4"	40 lbs.
9680203	1/2HP 115V 5.5A	9" to 33"	5	600 to 2952	MT2/JT33	3-5/32"	8-7/8 x 9"	90 lbs.

NORSE Step Pulley Floor Drill Press

15" **ITEM# 9680201** - Dimensions: 18"D x 12"W x 62"H

- 5/8" Chuck and key

17" **ITEM# 9680208** - Dimensions: 21"D x 14"W x 65"H

- 3/4" Chuck and key

The NORSE step pulley drill presses have the weight and rigidity to maintain the built-in tolerances for metal and woodworking applications. 16 Speeds allow the operator to drill a wide range of large and small holes into a variety of materials. The cast iron table can swivel around the column, tilt L to R up to 45° or rotate 360°.

- Quick change vertical depth stop for repetitive accurate operations
- Rack and pinion table height adjustment
- Front mounted locking rocker switch to prevent unauthorized use

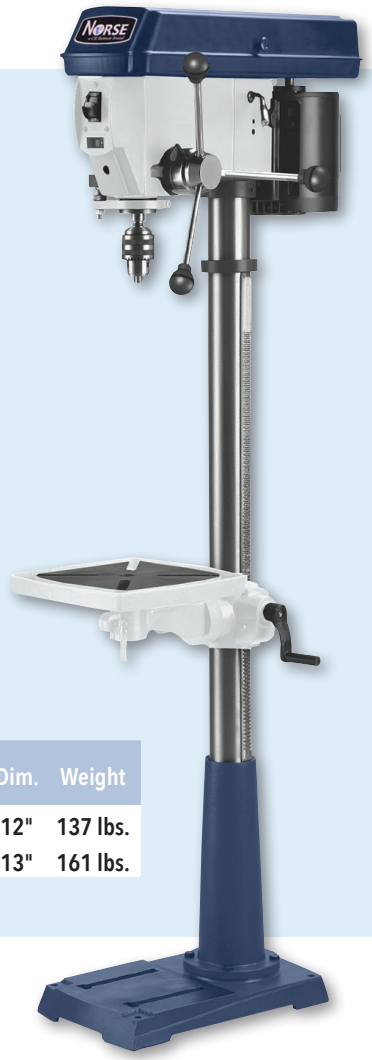

Item #	Motor	Swing	Speeds	RPM	Taper	Spindle Travel	Table Dim.	Weight
9680201	3/4HP 120V 10A 1725 RPM	15"	16	240 to 3200	MT2/JT3	3.34"	12" x 12"	137 lbs.
9680208	1HP 120V 10A 1725 RPM	17"	16	200 to 3600	MT3/JT3	3.34"	13" x 13"	161 lbs.

NORSE 33" Floor Radial Arm Drill Press **ITEM# 9680204**

An extended reach, tilting drill head is ideal for large or odd-shaped workpieces. The table tilts 45° left or right allowing easy machining of holes at almost any angle. The head tilts 90° to the left and 45° to the right. The head of the drill press moves 12-1/2" forward or backward.

Dimensions: 13"D x 32"W x 65"H

- Durable cast iron head, table and base
- Rack and pinion table movement
- 1/2" Center hole in table for through drilling with 1/2" through slots in table and base for mounting/clamping workpiece
- Includes 5/8" chuck and key JT3 Taper
- Front mounted safety switch with paddle for ON/OFF

Item #	Motor	Swing	Spindle Speeds	RPM	Spindle Taper	Spindle Travel	Table Dimensions	Weight
9680204	1/2HP 115V 5.5A	9" to 33"	5	600 to 2952	MT2/JT33	3-5/32"	10-3/8 x 10-3/8"	120 lbs.

NORSE Vari-Speed Drill Presses

12" **ITEM#9680205**
Dimensions: 13"D x 23"W x 39"H
- Includes 1/2" x JT33 Chuck and Key

16.5" **ITEM# 9680218**
Dimensions: 15"D x 27"W x 65"H
- Includes 5/8" x JT3 Chuck and Key

The NORSE variable speed drill presses were designed for wood and metal working. The cast iron tables allow easy clamping of larger work pieces. The 3-spoke feed handle incorporates an ergonomic speed feed handle. The drill presses include an LED readout for spindle speed and spindle depth while operating. The quick change vertical depth stop for accurate repeatable drilling.

- Variable speed operation with LED readout
- Ergonomic speed feed handle
- Cast iron drill press tables with through holes
- Vertical depth stop and LED digital depth readout
- Rack and pinion table adjustment

Item #	Motor	Swing	Spindle Speeds	RPM	Spindle Taper	Spindle Travel	Table Dimensions	Weight
9680205	1/3HP 120V 6A	12"	Variable	770 to 3160	JT33	2-9/16"	9.4" x 9.4"	95 lbs.
9680218	3/4HP 120/240V 9.0/4.5A	16-1/2"	Variable	260 to 2040	MT2/JT3	5"	12" x 12"	198 lbs.

Norse Woodcutting Band Saw

10" ITEM# 9683124
Dimensions: 21"D x 16-1/2"W x 34"H

14" ITEM# 9683125
Dimensions: 20"D x 33"W x 68"H

The Norse woodcutting band saws feature welded steel frame construction and a solid cast iron table surface to ensure durability. It is designed for cutting hardwoods and softwoods. A convenient quick tensioning and comprehensive tracking mechanism makes blade changing quick and easy. The saws also feature a rip fence and dust collection port.

- Belt drive system (14" has two speeds 1445 & 3150 FPM)
- Machined cast iron table with miter gauge slot
- Balanced cast blade wheels
- Includes rip fence assembly and miter gauge
- Open leg steel floor stand included (14" Band Saw only)

Item #	Motor	Cutting Depth Throat Depth	Cutting Depth Max @ 90°	Ripping Capacity Max @ 45°	Ripping Capacity Table Size	Table Tilt	Blade (L&W)	Blade Speed (SPM)	Dust Port	Weight
9683124*	1/3 HP 120V 3.4A 1PH	9-1/2"	4"	2"	13" x 13"	0 to 45°	67-3/8" x 1/2"	2900	4", 2-1/2", 2"	70 lbs.
9683125	1HP 120V 9.5A 1PH	13-1/2"	9"	6"	16" x 21"	0 to 45°	101 x 3/4"	1445/3150	4"	189 lbs.

*Norse Replacement Blades for 9683124

Item # 9683141 – 67-3/8" x 1/2" x 4TPI
Item # 9683142 – 67-3/8" x 1/4" x 6TPI

NORSE 22" Wood Cutting Band Saw

ITEM# 9683126

The NORSE 22" wood cutting band saw is designed for heavy duty performance. The 4HP motor gives you the power to cut the bigger boards with smoother cuts and greater accuracy. The extruded aluminum fence is designed for accuracy and smooth operation on the front mounted rails. Toolless blade guide adjusting screws save time on set up. The cast iron table includes two slots so the miter gauge can be used on either side of the blade.

Dimensions: 20"D x 33"W x 68"H

- Belt drive system
- Machined cast iron table with miter gauge slot
- Balanced cast blade wheels
- Includes rip fence assembly and miter gauge

		Cutting Depth		Ripping Capacity		Table	Blade	Blade Speed		
Item #	Motor	Throat Depth	Max @ 90°	Max @ 45°	Table Size	Tilt	(L&W)	(RPM)	Dust Port	Weight
9683126	3HP 230V 13.6A 1PH	21"	11.8"	8"	27-1/2" x 19"	0 to 20°	152" x 1-1/2"	2925 RPM	4"	814 lbs.

NORSE 15" Wood/Metal Cutting Band Saw

ITEM# 9683113

The wood/metal vertical band saw cuts a variety of materials including wood, plastic, composites, ferrous and non-ferrous metals. The extra wide speed range utilizes a 6 speed gear box to obtain 45 to 215 FPM. For wood working it requires a belt change to operate at 3000 FPM. The cast iron table includes a rip fence and a miter gauge for precision cutting.
Dimensions: 25"D x 27"W x 72"H

- 7-Speed belt and gear drive system: 45 to 3000 FPM
- Machined cast iron table 15" x 15" with miter gauge slot
- Balanced cast blade wheels, 15" diameter
- Blade length 113", blade width range 3/16" to 3/4"
- Includes 2 blades: wood cutting - 8TPI & metal cutting - 14TPI
- Includes chip blower, chip chute, rip fence, miter gauge
- Prewired 120V

NORSE 18" Wood/Metal Cutting Band Saw

ITEM# 9683117

The wood/metal vertical band saw cuts a variety of materials including wood, plastic, composites, ferrous and non-ferrous metals. The extra wide speed range utilizes a 6 speed gear box to obtain 45 to 215 FPM. For wood working it requires a belt change to operate at 3000 FPM. The cast iron table includes a rip fence and a miter gauge for precision cutting.
Dimensions: 25"D x 32"W x 76"H

- 7-Speed belt and gear drive system: 45 to 3000 FPM
- Machined cast iron table 18" x 19" with miter gauge slot
- Balanced cast blade wheels, 18" diameter
- Blade length 136", blade width range 3/16" to 1"
- Includes 2 blades: wood cutting - 8TPI & metal cutting - 14TPI
- Includes chip blower, chip chute, rip fence, miter gauge
- Prewired 120V

		Cutting Depth		Ripping Capacity				Blade	Dust	
Item #	Motor	Throat Depth	Max @ 90°	Max @ 45°	Table Size	Table Tilt	Blade (L&W)	Speed	Port	Weight
9683113	1HP 120/240V 14/7A 1PH	14-5/8"	10"	5"	15" x 15"	10°L to 45°R	113" x 3/4"	45 to 3000FPM	4"	300 lbs.
9683117	1-1/2HP 120/240V 18/9A 1PH	17-3/4"	12"	6"	18" x 19"	10°L to 45°R	136" x 3/4"	45 to 3000FPM	4"	355 lbs.

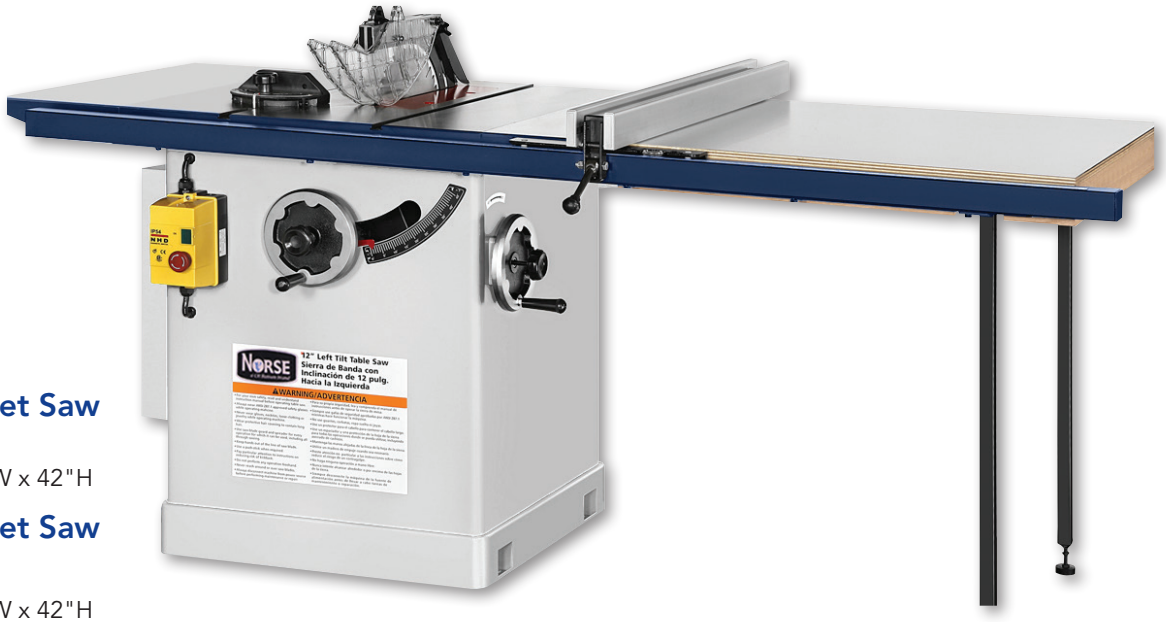

10" Left Tilt Cabinet Saw

ITEM# 9683413
Dimensions: 40"D x 77"W x 42"H

12" Left Tilt Cabinet Saw

ITEM# 9683415

Dimensions: 43"D x 80"W x 42"H

NORSE cabinet table saws offer precise cutting performance for all woods up to 3" thick for item 9683413 and 4" for item 9683416. Ruggedly constructed for continuous service. The saw features an extra large cast iron table with extensions for ripping a max of 50" to the right of the blade. For dado cuts a 5/8" diameter arbor and 5/8" diameter arbor extension along with a 1" arbor extension are included with the dado table insert (9683415). Max 13/16" dado capacity. The rip fence assembly is designed for simple one-hand maneuverability. Table height is 34" high.

- Left tilt or right tilt blade
- Machined cast iron table w/cast iron extensions:
  10" - 37"W x 27"D with 2 miter gauge slots
  12" - 48"W x 30"D with 2 miter gauge slots
- "T" Style rip fence assembly glides smoothly on front and rear rails
- Quick release blade guard system with riving knife and anti-kickback pawls
- Includes rip fence, miter gauge, 10" x 40 tooth general purpose blade, 5/8" dado extension, dado table insert
  12" x 40 tooth general purpose blade, 5/8" arbor extension, 5/8" dado extension, 1" arbor extension, dado table insert

		Cutting Depth		Ripping Capacity		Table			Dust	
Item #	Motor	90°	45°	Right	Left	w/Ext	Blade	Blade Speed	Port	Weight
9683413	3HP 230V 16A 1PH	3"	2-1/8"	50"	10"	37" x 27"	10" -5/8" Bore	4000 RPM	4"	515 lbs.
9683415	3HP 230V 16A 1PH	4"	2-3/4"	50"	9-1/8"	48" x 30"	12" -1" Bore	4000 RPM	4"	615 lbs.

10" Right Tilt Cabinet Saw

ITEM# 9683414
Dimensions: 40"D x 77"W x 42"H

12" Right Tilt Cabinet Saw

ITEM# 9683416
Dimensions: 43"D x 80"W x 42"H

NORSE cabinet table saws offer precise cutting performance for all woods up to 3" thick for item 9683413 and 4" for item 9683416. Ruggedly constructed for continuous service. The saw features an extra large cast iron table with extensions for ripping a max of 50" to the right of the blade. For dado cuts a 5/8" diameter arbor and 5/8" diameter arbor extension along with a 1" arbor extension are included with the dado table insert (9683416). Max 13/16" dado capacity. The rip fence assembly is designed for simple one-hand maneuverability. Table height is 34" high.

- Left tilt or right tilt blade
- Machined cast iron table w/cast iron extensions:
  10" - 37"W x 27"D with 2 miter gauge slots
  12" - 48"W x 30"D with 2 miter gauge slots
- "T" Style rip fence assembly glides smoothly on front and rear rails
- Quick release blade guard system with riving knife and anti-kickback pawls
- Includes rip fence, miter gauge, 10" x 40 tooth general purpose blade, 5/8" dado extension, dado table insert
  12" x 40 tooth general purpose blade, 5/8" arbor extension, 5/8" dado extension, 1" arbor extension, dado table insert

		Cutting Depth		Ripping Capacity		Table			Dust	
Item #	Motor	90°	45°	Right	Left	w/Ext	Blade	Blade Speed	Port	Weight
9683414	3HP 230V 16A 1PH	3"	2-1/8"	50"	10"	37" x 27"	10" -5/8" Bore	4000 RPM	4"	515 lbs.
9683416	3HP 230V 16A 1PH	4"	2-3/4"	50"	9-1/8"	48" x 30"	12" -1" Bore	4000 RPM	4"	615 lbs.

NORSE 10" Bench Top Table Saw ITEM# 9683412

Portable yet stationary, the NORSE 10" bench top table saw can be secured to a bench or mounted to the included stand. A powerful 15 Amp motor drives the 10" blade for ripping, cross cut or angle/bevel cuts. The right table extension allows the operator to cut up to 25-3/8" wide. This means you can easily rip a sheet of plywood in half. The blade guard and riving knife meet all UL safety standards for quick release and re-assembly.
Dimensions: 21"D x 16-1/2"W x 34"H

- 2HP 15 Amp 120V Motor
- Left tilt blade 0 to 45°
- Dual locking rip fence for accurate rip cuts
- Includes rip fence, miter gauge, blade and push stick

		Cutting Depth		Ripping Capacity		Table	Blade		Dust	
Item #	Motor	90°	45°	Right	Left	w/Ext	(L&W)	Blade Speed	Port	Weight
9683412	**2HP 120V 15 Amp**	**3-1/4"**	**2-1/4"**	**25-3/8"**	**8"**	**39" x 22-1/2"**	**10" -5/8" Bore**	**5000 RPM**	**1-1/4"**	**38 lbs.**

10" Left Tilt Contractor Saw ITEM# 9683410

NORSE 10" contractor table saws offer precise cutting performance for all woods up to 3-1/8" thick. Ruggedly constructed for continuous service. The saw features a 20" x 26" cast iron table with 10" x 26" stamped steel table extensions for ripping a max of 30" to the right of the blade. The rip fence assembly is designed for simple one-hand maneuverability with locking in the front and rear of the saw. Table height is 37" high. 4" Industrial casters are mounted to the base of the saw for maximum portability. Includes quick release blade guard system with adjustable riving knife. On-board storage for blade, rip fence, miter gauge, blade guard, anti-kick back pawls and line cord

Dimensions: 40"D x 57"W x 43"H

- Left tilt blade
- Machined cast iron table w/stamped steel extensions: 40"W x 26"D with 2 miter gauge slots
- Dual locking rip fence assembly glides smoothly on front and rear rails
- Quick release blade guard system with riving knife and anti-kickback pawls
- Includes rip fence, miter gauge, 10" x 40 tooth general purpose blade

		Cutting Depth		Ripping Capacity		Table			Dust	
Item #	Motor	90°	45°	Right	Left	w/Ext	Blade	Blade Speed	Port	Weight
9683410	**1-3/4HP 120/240V 15/7.5A 1PH**	**3-1/8"**	**2-3/16"**	**30"**	**13"**	**26" x 20"**	**10" x 5/8" Bore**	**3550 RPM**	**4"**	**250 lbs.**

Norse Radial Arm Saw

ITEM# 9683417

This radial arm saw is a unique tool as it performs many of the same functions as a table saw: ripping, crosscuts, dado, miter cuts and bevel cuts. The powerful direct drive 2HP motor gives you the power to cut material up to 3" thick at 90°. The saw will also accept a 10" blade with a 5/8" arbor. Once you release the switch, the saws braking system will stop the blade in just a few seconds. The large wooden top, 27" x 35" is easily replaced when the time comes.

Dimensions: 35"D x 35"W x 66"H

- Provides a variety of cuts: ripping, cross cutting, dados
- Automatic blade brake
- Sturdy steel stand
- Includes blade guard and anti-kickback pawls
- Saw arm uses ball bearings for head glide

Item #	Motor	Blade	12" Blade Max @ 90°	12" Blade Max @ 45°	Arbor	Table Dimensions	Bevel Stops	Weight
9683417	2HP 220V 6.5A 3400 RPM	12/10"	3"	2-1/4"	5/8" w/1" Bushing	27" x 35"	0,45°, 90°	398 lbs.

DUST COLLECTORS

NORSE Dust Collectors

650 CFM Dust Collector ITEM# 9686004

Dimensions: 20"D x 35"W x 61"H

1490 CFM Dust Collector ITEM# 9686006

Dimensions: 27"D x 36"W x 76"H

NORSE dust collectors help reduce dust particles in the air which can be hazardous to your health. They also keep your shop clean to prevent accidents. Model # 9686004 is lightweight and compact and can be connected to any tool. It includes a 22 gallon clear dust collection bag so you know when it needs to be emptied. The larger unit, 9686006 comes with a dual voltage motor and 1490 CFM to allow the user to connect two machines or connect to a shop dust collection system (not included). The 40-gallon collection bag may be reused or replaced. See below for replacement bags.

- 5-Micron filter bags
- Replaceable clear poly collection bags
- Portable, includes casters
- Locking rocker switch to prevent unauthorized use

Item #	Motor	CFM	Hose Size	Filter Bag	Collection Bag	Casters	Weight
9686004	3/4HP 120V 4.5A 1PH	650	4" x 78"	5 Micron	22 Gallon	2 x 6"	62 lbs.
9686006	2HP 120/240V 15/7.5A 1PH	1490	4" x 72"	5 Micron	40 Gallon	4 x 2"	112 lbs.

NORSE Replacement Bag for 9686004

ITEM# 9686008

NORSE Replacement Bag for 9686006

ITEM# 9686007

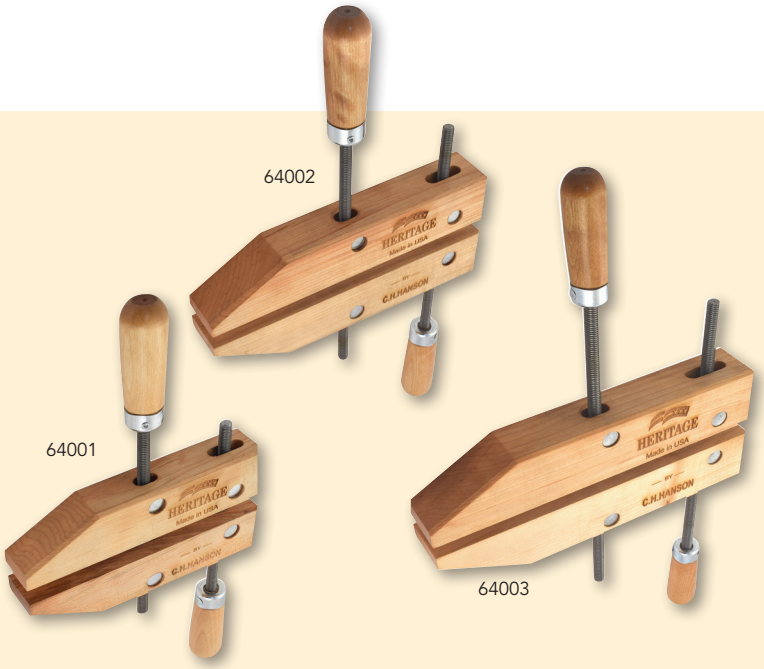

Heritage Wood Handscrew Clamps

- Made from quality North American rock maple or birch wood
- Manufactured in the USA for craftsmen everywhere
- Jaws adjust to any angle for clamping all surfaces

Item #	Description	Package
64001	8" Wood Handscrew Clamp	4 pieces
64002	10" Wood Handscrew Clamp	4 pieces
64003	12" Wood Handscrew Clamp	4 pieces

Heritage Spring Clamps

- Made with high quality forged American steel
- Manufactured in the USA
- Up to 30% stronger than imports
- Tang compression spring keeps the clamp jaws in alignment
- Available in 4 sizes, with and without protective tip

Item #	Description	Package
64011	1" Spring Clamps with Tips	12 pieces
64012	2" Spring Clamps with Tips	12 pieces
64013	3" Spring Clamps with Tips	6 pieces
64014	4" Spring Clamps with Tips	6 pieces
64021	1" Spring Clamps without Tips	12 pieces
64022	2" Spring Clamps without Tips	12 pieces
64023	3" Spring Clamps without Tips	6 pieces
64024	4" Spring Clamps without Tips	6 pieces

LAYOUT TOOLS

Magnetic Stud Finder™

- Powerful rare earth magnets locate metal and wood studs
- Rotating level for horizontal and vertical leveling
- No batteries required
- 6 each per case pack
- Ideal for remodeling, new construction, and DIY projects
- Compact design easily fits in your pocket

Item #	Description	Package
03040	Magnetic Stud Finder™	Carded

Angle Snap®

- Unique layout tool
- Accurately measures and marks sheet goods like plywood and drywall
- Measures in Degrees and Pitches
- Comes with chalk reel
- Easy 1 person marking - two adjustable grip pins anchor tool on desired mark
- Measure angles - use as protractor for finding angles and roof pitches
- 6 each per case pack

Item #	Description	Package
03070	AngleSnap®	Carded

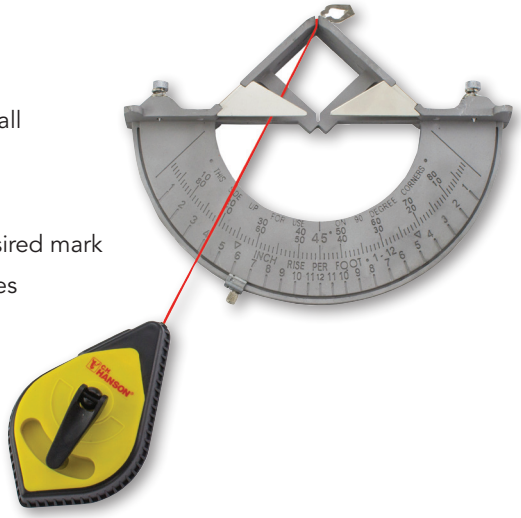

Pivot Square®

- Precision measurement tool
- Pivots to easily measure or mark any angle
- Locks in angles
- Quickly find roof pitch
- Has three vials to determine roof pitches, indicate grade, and allow for leveling and plumbing
- 4 each per case pack

Item #	Description	Package
03060	Machined Aluminium Pivot Square®	Clam Shell
00203_PUR	Pivot Square® User's Guide	Box
03065	Resin Pivot Square®	Carded

Slide Square®

- This square is the one tool that easily and accurately solves all your layout needs
- Marks accurate anchor bolt hole locations onto 2" x 4" and 2" x 6" sill plates
- Marks right angles with positive stop at 90°
- Mark common, hip, and valley roof cuts and angles
- Fits in your pocket
- 6 each per case pack

Item #	Description	Package
03050	Slide Square®	Carded

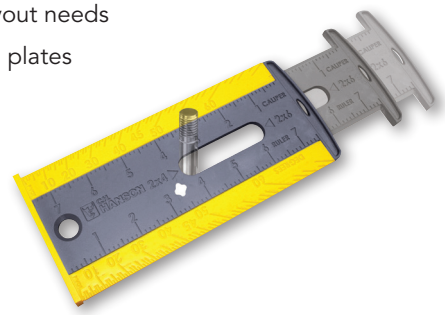

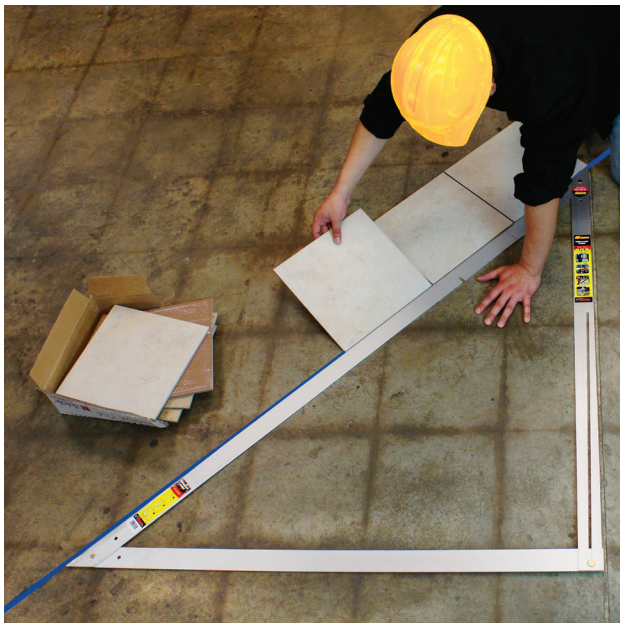

Heavy Duty Aluminum Folding Layout Asquare

- Aircraft Aluminum construction
- Collapsing triangle for easy storage
- Easy to use, for quick and accurate work

3'x4'x5' 90°

- Only true 3' x 4' x 5' square with accuracy within 1/32"
- Uses: Carpentry, angle layout, squaring, framing timber, and much more

54" 45°

- Provides true 90° angle and two 45°angles in a folding layout square

Item #	Description	Package
00345	3'x4'x5' 90° Heavy Duty Alum. Folding Layout Asquare	Tube
34502	3'x4'x5' 90° Heavy Duty Alum. Folding Layout Asquare (3 pack per Tube)	Tube
00045	54" 45° Heavy Duty Alum. Folding Layout Asquare	Tube
45002	54" 45° Heavy Duty Alum. Folding Layout Asquare (3 pack per Tube)	Tube

MARKING

RETRACTABLE PENCIL PULL®

- Self retractable pencil holder
- Holds carpenter pencils, crayons, pens, markers and more
- Easily clips on belt, pocket or shirt
- Loaded on a clip strip of 12 each per case pack

Item #	Description	Package
10570	Retractable Pencil Pull® Pencil Holder	Clip strip

Stop looking for your pencil, this is one tool you don't think you need until you try it

CARPENTER PENCILS

- Perfect for marking fine lines, molding, saw lines, drill points, etc.
- Must be ordered in case pack quantities

Item #	Description	Case Pack	Package
10378	Hard Lead	72	Boxed
10379	Soft Lead	72	Boxed
10380	Medium Lead	72	Boxed
10231	Red Lead Carpenter's Pencil	72	Boxed
10316	Economy Medium Basswood	72	Boxed
10560-PUR	Sure-Point™ Finish Carpenter's Pencil (Round)	144	Boxed
10561	Finish Pencil, Red, Lacquered (Round)	144	Boxed

VERSASHARP

- Sharpens carpenter pencils, lumber crayons, and standard pencils
- Ergonomically designed

Item #	Description	Package
00202	VersaSharp™ Sharpener-25 count	Display Box
00208	VersaSharp™ Fish Bowl - 25 count	Carded

COMBO MARK

- Double-ended marking tool combines carpenter pencil with lumber crayon
- Marks wood, concrete, metal, or glass
- 24 each per case pack

Item #	Description	Package
10456	Combo Mark with yellow lumber crayon	Bulk
10457	Combo Mark with red lumber crayon	Bulk
10458	Combo Mark with blue lumber crayon	Bulk

PENCIL SHARPENER/COMBO

- 15 ProSharp™ Pencil Kit contains: 15 of our best selling medium lead round finishing pencils with erasers, ProSharp™ chuckable pencil sharpener and re-usable storage tube
- Case Pack: 02010 -9 tubes per case pack, 00206 / 12 each per case pack, 00221 / 12 each per case pack

Item #	Description	Package
00213	10 Hanson Pencils with 1 VersaSharp	Tube
02010	ProSharp™ with 15 pencils	Tube
00206	Combo 2 Pencils with VersaSharp™	Carded
00221	6 Hanson Pencils with 1 VersaSharp	Carded

PENCIL ARMOR®

- Helps prevent pencil from breaking. Includes Heavy Duty Pocket Clip
- Case Pack: 10405 - 24 each per case pack / 00118 - 12 each per case pack

Item #	Description	Package
10405	Pencil Armor®	Display Box

WOOD LUMBER CRAYON HOLDER

- Securely holds crayon for better control
- Prevents crayon from breaking and allows use of full crayon
- 12 each per case pack

Item #	Description	Package
10387	Wood Lumber Crayon - Holder	Bulk

LUMBER CRAYONS

- 1/2" hexagon x 4.5" long

Premier - Boxed 12 - Marks lumber and most other surfaces

- No Melt Crayon withstands 300°F - Weather/fade/sun resistant

Item #	Description	Package
10382	Red Premier	Boxed
10383	Blue Premier	Boxed
10384	Black Premier	Boxed
10385	Yellow Premier	Boxed

Standard - Boxed 12 - For marking wood, metal, concrete

Item #	Description	Package
10365	Red Standard	Boxed
10366	Blue Standard	Boxed
10367	Black Standard	Boxed
10368	Yellow Standard	Boxed
10370	White Standard	Boxed

Standard - 2 pk. Carded

Item #	Description	Package
10352	Blue	Carded
10353	Black	Carded
10356	Red	Carded
10386	Yellow	Carded

Promising Focus On YOU, Our Customer, In Today's Busy World

After 150+ years, I can say our company has changed a lot since it was founded by my great grandfather, Christian Henry Hanson, in 1866. We have grown out of several facilities and introduced thousands of new products; but one thing that has never wavered is our commitment to the customer. We work each day to Glorify God by delivering on our promise to help you succeed.

We strive to be...

INNOVATIVE
Always improving, always creating

AVAILABLE
Get what you need, when you need it

ECONOMICAL
High performance at the most competitive price

TRUSTWORTHY
Always doing the right thing

Your partners at C.H. Hanson will continue to bring you solutions that support your business today and well into the future!

Blessings,

Phil Hanson
President, C.H. Hanson

OUR FAMILY OF PRODUCTS

PALMGREN® a CH Hanson brand
www.palmgren.com

NORSE a CH Hanson brand

C.H. HANSON®
www.chhanson.com

2000 N. Aurora Road, Naperville, IL 60563
P: 800-827-3398 | F: 800-827-5834 | E: sales@chhanson.com

NORSE

a CH Hanson brand

WOODWORKING CATALOG

2" x 6" Belt & Disc Sander

ITEM# 9681119

NORSE's direct drive combination belt and disc finishing machine will grind, sand, finish, polish, deburr, and contour all types of materials and parts. The direct drive power train with a heavy duty capacitor motor allows the unit to work underload without slowing or bogging down.
Dimensions: 8"D x 14"W x 23"H

- 2" x 42" Belt (also works with 1" x 42" Belt, not included) and 6" PSA disc
- Belt operates in the horizontal or vertical position and is designed for fast easy belt changes
- Both belt and disc come with a tilting worktable. Disc table is slotted to accept the standard miter gauge
- 1-1/2" Dust port for the disc
- Cast base for maximum rigidity

Replacement Sanding Belts:

Item # 9681348 - 2" x 42" x 120 Grit (3pk)
Item # 9681349 - 2" x 42" x 80 Grit (3pk)
Item # 9681350 - 2" x 42" x 50 Grit (3 pk)

4" x 6" Belt & Disc Sander

ITEM# 9681114

Space saving 4" x 6" belt & disc sander fits almost anywhere in your shop. The 4" x 36" abrasive belt operates at 1900 SFPM for aggressive material removal. The belt arm can be adjusted anywhere from horizontal to vertical position depending on your work needs. The 6" disc includes a table for precise sanding of angles and miters or just for finish sanding of cuts.
Dimensions: 15-1/2"D x 14"W x 23"H

- 1/2HP 120V motor easily operates off of household electrical
- Cast aluminum disc table tilts up to 45° for angle sanding
- Miter gauge included

6" x 9" Belt & Disc Sander

ITEM# 9681115

Powerful 6" x 9" belt & disc sander designed for heavy sanding jobs. The 6" x 48" abrasive belt operates at 1836 SFPM for aggressive material removal. The belt arm can be adjusted anywhere from horizontal to vertical position depending on your work needs. The extra large platen area provides a flat sanding surface to handle a variety of jobs. The 9" PSA disc includes a table for precise sanding of angles and miters or just for finish sanding of cuts.
Dimensions: 18"D x 14"W x 23"H

- 1HP 120V 8.0A motor easily operates off of household electrical
- Cast aluminum disc table tilts up to 45° for angle sanding
- Miter gauge included
- Includes a locking switch to prevent unauthorized use

Item #	Motor	Disc Size	Disc RPM	Disc Table	Belt Size	Belt Platen	Belt SFPM	Dust Port	Weight
9681114	1/2HP 120V 4.3A	6"	3600	6-1/4" x 9"	4" x 36"	12" x 4-7/8"	1900	2-1/2"	33 lbs.
9681115	1HP 120V 8.0A	9"	2510	6" x 11-1/2"	6" x 48"	14-1/2" x 6"	1836	2"	72 lbs.

Item #	Motor	Disc Size	Disc RPM	Belt Size	Belt SFPM	Disc Table Size	Belt Table Size	Weight
9681119	1/3HP 120V 3.5A	6"	3600	2" x 42" or 1" x 42"	4400	6-1/8 x 8"	6-3/4" x 9"	32 lbs.

Norse 6" x 9" Belt & Disc Sander with Stand

ITEM# 9681121
Dimensions: 22"D x 26-1/2"W x 55"H

Norse direct drive combination belt & disc machine will grind, sand, finish, polish, deburr, and contour all types of materials and parts. Using a direct drive power train system with a heavy duty capacitor motor allows the unit to work underload without slowing or bogging down. Even though the unit comes with a stand, it can be mounted to a bench. Belt arm operates anywhere from vertical to horizontal positioning.

- Belt operates in the horizontal to vertical position and is designed for fast, easy belt changes
- Both the belt and disc come with tilting work tables that are slotted to accept the included miter gauge
- The cast iron base is oversized for maximum rigidity and support

Item #	Motor	Disc Size	Disc RPM	Disc Table	Belt Size	Belt Table	Belt SFPM	Dust Port	Weight
9681121	1HP 120/240V 9/4.5A 3450 RPM	9"	3450	6" x 12"	6" x 48"	6" x 10"	2700	1-1/4"	115 lbs.

6" x 10" Belt & Disc Sander with Cabinet

ITEM# 9681116

Dimensions: 18"D x 21"W x 60"H

- The 1HP motor is dual voltage 120/240V operation (13.4/6.7A). Prewired 120V
- Locking rocker switch to prevent unauthorized use

6" x 12" Belt & Disc Sander with Cabinet

ITEM# 9681117

Dimensions: 19"D x 23"W x 60"H

- The 1-1/2HP motor is dual voltage 120/240V operation (14/7A). Prewired 120V
- Emergency stop paddle

The Norse combination belt and disc finishing machine is a versatile and economical workshop tool. 4" Dust collection shrouds for both belt & disc operations. The units induction motor is housed in the fully enclosed cabinet. Cast iron tables along with the cast iron body deliver rigidity and vibration free operation.

- Cast iron tables for belt and disc operation tilt up to 45° and include a miter gauge slot
- Miter gauge included
- Belt operates vertically or horizontally and is designed for fast easy belt changes
- 4" Dust port for disc and belt

Item #	Motor	Disc Size	Disc RPM	Disc Table	Belt Size	Belt Platen	Belt SFPM	Belt Table	Weight
9681116	1HP 120/240V 13.4/6.7A	10"	1880	7" x 14"	6" x 48"	16-3/4" x 6-1/4"	1470	6" x 10-1/8"	178 lbs.
9681117	1-1/2HP 120/240V 14/7A	12"	2350	7" x 16"	6" x 48"	16-3/4" x 6-1/4"	1836	6" x 10-1/8"	191 lbs.

12" Disc Sander ITEM# 9681309

Heavy duty cast iron construction makes the Norse 12" disc sander ideal for finishing outside radius of wood, plastics and composite materials. Finish precision angles with the miter gauge and tilting table. Direct drive design with a 3/4HP motor provides the power needed for all of your finishing operations.

Dimensions: 18"D x 21"W x 16"H

- Abrasive wheel brake
- 45° Tilting table with miter gauge slot (miter gauge included)
- Balanced cast iron disc
- 12" PSA Disc

Item #	Motor	Disc Size	Disc RPM	Disc Table	Table Tilt	Weight
9681309	3/4HP 120V 8A	12"	1720	16" x 8-3/8"	0 to 45°	65 lbs.

Norse Disc Sander with Cabinet

16" ITEM# 9681310

Dimensions: 28"D x 23"W x 45"H

- Balanced cast iron 16" disc
- Heavy duty steel floor cabinet with storage

20" ITEM# 9681311

Dimensions: 28"D x 28"W x 47"H

- Balanced cast iron 20" disc
- Heavy duty steel floor cabinet with storage

Norse's high performance disc finishing machine is built to handle general purpose to precision finishing applications. Available in both 16" and 20" disc sanders with cabinets. The increased worksurface area quickly finishes larger workpieces. Safety electrical system: drum start/stop/forward/reverse switch and ON/OFF push button power switch with keyed lockout and emergency stop button with electronic brake.

- Direct drive design with oversized draft shaft and sealed ball bearings
- 45° Tilting table with miter gauge slot (miter gauge included)
- Adjustable disc guarding for safe operation

Item #	Motor	Disc Size	Disc RPM	Disc Table	Table Tilt	Dust Port	Weight
9681310	1.5HP 115V 17.8A	16"	1750	18-1/2" x 8-1/2"	-5° to 45°	4"	267 lbs.
9681311	2HP 230V 11.2A 1PH	20"	1750	23" x 8-1/2"	-5° to 45°	4"	314 lbs.

Norse Horizontal Vertical Edge Sander

The Norse edge sanders help provide the perfect finish to long edge applications such as doors, cabinet doors, picture frames and molding. The sanding belt can be tilted from 0° to 90° with a simple lever adjustment. The table adjusts up and down to utilize the entire sanding belt width. A special table is included for sanding radial edges using the sanding belt drive drum.

ITEM# 9681120
Dimensions: 29"D x 26"W x 48"H

- 6" x 48" Abrasive Belt
- Belt guard with dust port opens to allow radial sanding utilizing the drive drum
- Workstop included

ITEM# 9681118
Dimensions: 51"D x 26-1/2"W x 44"H

- 6" x 89" Abrasive Belt
- Extension table used for radius sanding adjusts up and down to use the entire width of the belt
- Adjustable fence included for horizontal sanding support
- Miter Gauge included

Item #	Motor	Belt Size	Belt Speed SFPM	Tilt	Platen	Table Size	Table Adjustment	Dust Collection	Weight
9681120	3/4HP 120V 8.0A	6" x 48"	1950	0° to 90°	17" x 6"	17-1/4" x 10"	Up & Down	2-1/2"	98 lbs.
9681118	1-1/2HP 120V 15A	6" x 89"	1800	0° to 90°	31" x 6"	30" x 10"	Up & Down	4"	257 lbs.

NORSE Bench Grinder w/Light

6" **ITEM# 9682060** - Dimensions: 10"D x 13"W x 13"H

8" **ITEM# 9682080** - Dimensions: 10"D x 16"W x 16"H

NORSE bench grinders are a staple in every garage or shop. They provide smooth quiet power for all grinding, cleaning, deburring, chamfering and sharpening jobs. Dynamically balanced rotors and sealed bearings minimize vibration and ensure smooth running. The flex lamp with an independent switch allows for set up with the wheels running.

- 8" Variable speed unit operates from 2000 to 3450 RPM
- Flexible lamps with independent switch (40W bulb not included)
- Eyeshields, spark arrestors and adjustable tool rests included
- 6" Single speed grinder includes 2 abrasive wheels, 36 & 60 grit
- 8" grinder includes a 60 grit abrasive wheel and a 8" crimped wire wheel

Item #	Motor	Wheel Diameter	Grit	Face	Arbor Hole	Max RPM	Wheels C-C	Weight
9682060	1/3 HP 120V 2.1A 60Hz	6"	36 & 60	3/4"	1/2"	3450	13"	21 lbs.
9682080	1/2 HP 120V 5.0A 60Hz	8"	60 & Wire Wheel	1"	5/8"	2000-3400	16"	38 lbs.

NORSE Bench Buffer

6" **ITEM# 9682119** - Dimensions: 8"D x 18"W x 8"H

8" **ITEM# 9682120** - Dimensions: 8"D x 21"W x 8"H

Easily remove scratches and other imperfections, bring out the natural luster of your workpiece and effectively clean and polish a wide variety of materials. Both units are equipped with a strong, powerful motor that provides the necessary torque for startup and operation under load. (Buffing compounds required, but not included)

- Large diameter armature shaft with shielded bearings for smooth operation
- Extra long shafts to accept multiple buffing wheels
- Includes 1 spiral and 1 soft buffing wheel
- Locking rocker switch to prevent unauthorized use

Item #	Motor	Spiral Buff	Soft Buff	Arbor Shaft	Max RPM	Wheels C-C	Weight
9682119	1/2 HP 120/240V 5.0A/2.5A 60Hz	1-Included	1-Included	1/2"	3450	14-1/2"	21 lbs.
9682120	3/4 HP 120/240V 8/4.0A 60Hz	1-Included	1-Included	5/8"	3450	15-1/2"	23 lbs.

Norse 8" Bench Top Drill Press

ITEM# 9680202

This practical 8" drill press combines performance and economy into one. The powerful 1/3HP motor provides speeds from 760 to 3070 RPM utilizing step pulleys for a variety
of operations and materials. Cast iron and steel construction for rigidity and long life.
Dimensions: 17"D x 8"W x 23"H

- Front mounted safety switch with paddle for ON/OFF
- Cast iron table swivels 360° around the column as well as tilts left and right
- JT33 1/2" Chuck and key with key storage on the drill press head
- Center hole in the table for through drilling
- Positive locking drill depth stop for repetitive operations

Norse 33" Bench Top Radial Arm Drill Press

ITEM# 9680203

An extended reach, tilting drill head is ideal for large or odd-shaped workpieces. The table tilts 45° left or right allowing easy machining of holes at almost any angle. The head tilts 90° to the left and 45° to the right. The head of the drill press moves 12-1/2" forward or backward.
Dimensions: 13"D x 32"W x 32"H

- Durable cast iron head, table and base
- Rack and pinion table movement
- 1/2" Center hole in table for through drilling with 1/2" through slots in table and base for mounting/clamping workpiece
- Includes 5/8" chuck and key JT3 Taper
- Front mounted safety switch with paddle for ON/OFF

Item #	Motor	Swing	Spindle Speeds	RPM	Spindle Taper	Spindle Travel	Table Dimensions	Weight
9680202	1/3HP 120V 2.5A	8"	5	760 to 3070	JT33	2"	6-1/4 x 6-1/4"	40 lbs.
9680203	1/2HP 115V 5.5A	9" to 33"	5	600 to 2952	MT2/JT33	3-5/32"	8-7/8 x 9"	90 lbs.

NORSE Step Pulley Floor Drill Press

15" **ITEM# 9680201** - Dimensions: 18"D x 12"W x 62"H

- 5/8" Chuck and key

17" **ITEM# 9680208** - Dimensions: 21"D x 14"W x 65"H

- 3/4" Chuck and key

The NORSE step pulley drill presses have the weight and rigidity to maintain the built-in tolerances for metal and woodworking applications. 16 Speeds allow the operator to drill a wide range of large and small holes into a variety of materials. The cast iron table can swivel around the column, tilt L to R up to 45° or rotate 360°.

- Quick change vertical depth stop for repetitive accurate operations
- Rack and pinion table height adjustment
- Front mounted locking rocker switch to prevent unauthorized use

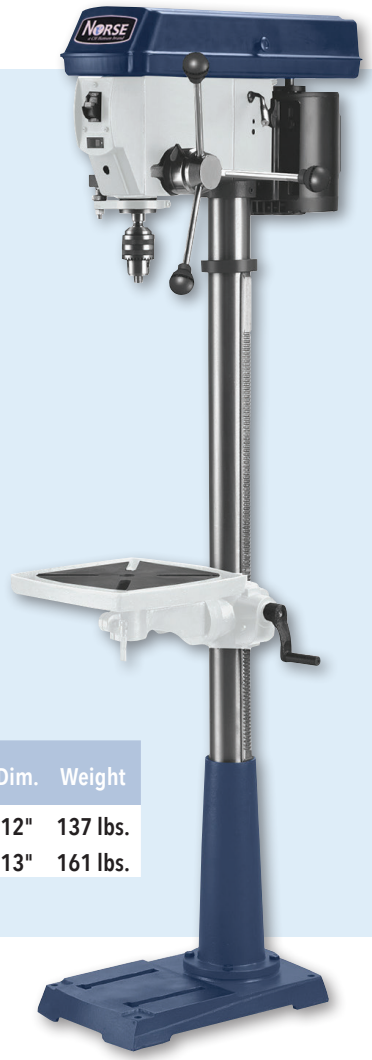

Item #	Motor	Swing	Speeds	RPM	Taper	Spindle Travel	Table Dim.	Weight
9680201	3/4HP 120V 10A 1725 RPM	15"	16	240 to 3200	MT2/JT3	3.34"	12" x 12"	137 lbs.
9680208	1HP 120V 10A 1725 RPM	17"	16	200 to 3600	MT3/JT3	3.34"	13" x 13"	161 lbs.

NORSE 33" Floor Radial Arm Drill Press **ITEM# 9680204**

An extended reach, tilting drill head is ideal for large or odd-shaped workpieces. The table tilts 45° left or right allowing easy machining of holes at almost any angle. The head tilts 90° to the left and 45° to the right. The head of the drill press moves 12-1/2" forward or backward.

Dimensions: 13"D x 32"W x 65"H

- Durable cast iron head, table and base
- Rack and pinion table movement
- 1/2" Center hole in table for through drilling with 1/2" through slots in table and base for mounting/clamping workpiece
- Includes 5/8" chuck and key JT3 Taper
- Front mounted safety switch with paddle for ON/OFF

Item #	Motor	Swing	Spindle Speeds	RPM	Spindle Taper	Spindle Travel	Table Dimensions	Weight
9680204	1/2HP 115V 5.5A	9" to 33"	5	600 to 2952	MT2/JT33	3-5/32"	10-3/8 x 10-3/8"	120 lbs.

NORSE Vari-Speed Drill Presses

12" **ITEM# 9680205**
Dimensions: 13"D x 23"W x 39"H
- Includes 1/2" x JT33 Chuck and Key

16.5" **ITEM# 9680218**
Dimensions: 15"D x 27"W x 65"H
- Includes 5/8" x JT3 Chuck and Key

The NORSE variable speed drill presses were designed for wood and metal working. The cast iron tables allow easy clamping of larger work pieces. The 3-spoke feed handle incorporates an ergonomic speed feed handle. The drill presses include an LED readout for spindle speed and spindle depth while operating. The quick change vertical depth stop for accurate repeatable drilling.

- Variable speed operation with LED readout
- Ergonomic speed feed handle
- Cast iron drill press tables with through holes
- Vertical depth stop and LED digital depth readout
- Rack and pinion table adjustment

Item #	Motor	Swing	Spindle Speeds	RPM	Spindle Taper	Spindle Travel	Table Dimensions	Weight
9680205	1/3HP 120V 6A	12"	Variable	770 to 3160	JT33	2-9/16"	9.4" x 9.4"	95 lbs.
9680218	3/4HP 120/240V 9.0/4.5A	16-1/2"	Variable	260 to 2040	MT2/JT3	5"	12" x 12"	198 lbs.

Norse Woodcutting Band Saw

10" ITEM# 9683124
Dimensions: 21"D x 16-1/2"W x 34"H

14" ITEM# 9683125
Dimensions: 20"D x 33"W x 68"H

The Norse woodcutting band saws feature welded steel frame construction and a solid cast iron table surface to ensure durability. It is designed for cutting hardwoods and softwoods. A convenient quick tensioning and comprehensive tracking mechanism makes blade changing quick and easy. The saws also feature a rip fence and dust collection port.

- Belt drive system (14" has two speeds 1445 & 3150 FPM)
- Machined cast iron table with miter gauge slot
- Balanced cast blade wheels
- Includes rip fence assembly and miter gauge
- Open leg steel floor stand included (14" Band Saw only)

Item #	Motor	Cutting Depth Throat Depth	Cutting Depth Max @ 90°	Ripping Capacity Max @ 45°	Ripping Capacity Table Size	Table Tilt	Blade (L&W)	Blade Speed (SPM)	Dust Port	Weight
9683124*	1/3 HP 120V 3.4A 1PH	9-1/2"	4"	2"	13" x 13"	0 to 45°	67-3/8" x 1/2"	2900	4", 2-1/2", 2"	70 lbs.
9683125	1HP 120V 9.5A 1PH	13-1/2"	9"	6"	16" x 21"	0 to 45°	101 x 3/4"	1445/3150	4"	189 lbs.

*Norse Replacement Blades for 9683124

Item # 9683141 – 67-3/8" x 1/2" x 4TPI
Item # 9683142 – 67-3/8" x 1/4" x 6TPI

NORSE 22" Wood Cutting Band Saw

ITEM# 9683126

The NORSE 22" wood cutting band saw is designed for heavy duty performance. The 4HP motor gives you the power to cut the bigger boards with smoother cuts and greater accuracy. The extruded aluminum fence is designed for accuracy and smooth operation on the front mounted rails. Toolless blade guide adjusting screws save time on set up. The cast iron table includes two slots so the miter gauge can be used on either side of the blade.

Dimensions: 20"D x 33"W x 68"H

- Belt drive system
- Machined cast iron table with miter gauge slot
- Balanced cast blade wheels
- Includes rip fence assembly and miter gauge

		Cutting Depth		Ripping Capacity		Table	Blade	Blade Speed		
Item #	Motor	Throat Depth	Max @ 90°	Max @ 45°	Table Size	Tilt	(L&W)	(RPM)	Dust Port	Weight
9683126	3HP 230V 13.6A 1PH	21"	11.8"	8"	27-1/2" x 19"	0 to 20°	152" x 1-1/2"	2925 RPM	4"	814 lbs.

NORSE 15" Wood/Metal Cutting Band Saw

ITEM# 9683113

The wood/metal vertical band saw cuts a variety of materials including wood, plastic, composites, ferrous and non-ferrous metals. The extra wide speed range utilizes a 6 speed gear box to obtain 45 to 215 FPM. For wood working it requires a belt change to operate at 3000 FPM. The cast iron table includes a rip fence and a miter gauge for precision cutting.
Dimensions: 25"D x 27"W x 72"H

- 7-Speed belt and gear drive system: 45 to 3000 FPM
- Machined cast iron table 15" x 15" with miter gauge slot
- Balanced cast blade wheels, 15" diameter
- Blade length 113", blade width range 3/16" to 3/4"
- Includes 2 blades: wood cutting - 8TPI & metal cutting - 14TPI
- Includes chip blower, chip chute, rip fence, miter gauge
- Prewired 120V

NORSE 18" Wood/Metal Cutting Band Saw

ITEM# 9683117

The wood/metal vertical band saw cuts a variety of materials including wood, plastic, composites, ferrous and non-ferrous metals. The extra wide speed range utilizes a 6 speed gear box to obtain 45 to 215 FPM. For wood working it requires a belt change to operate at 3000 FPM. The cast iron table includes a rip fence and a miter gauge for precision cutting.
Dimensions: 25"D x 32"W x 76"H

- 7-Speed belt and gear drive system: 45 to 3000 FPM
- Machined cast iron table 18" x 19" with miter gauge slot
- Balanced cast blade wheels, 18" diameter
- Blade length 136", blade width range 3/16" to 1"
- Includes 2 blades: wood cutting - 8TPI & metal cutting - 14TPI
- Includes chip blower, chip chute, rip fence, miter gauge
- Prewired 120V

		Cutting Depth		Ripping Capacity				Blade	Dust	
Item #	Motor	Throat Depth	Max @ 90°	Max @ 45°	Table Size	Table Tilt	Blade (L&W)	Speed	Port	Weight
9683113	1HP 120/240V 14/7A 1PH	14-5/8"	10"	5"	15" x 15"	10°L to 45°R	113" x 3/4"	45 to 3000FPM	4"	300 lbs.
9683117	1-1/2HP 120/240V 18/9A 1PH	17-3/4"	12"	6"	18" x 19"	10°L to 45°R	136" x 3/4"	45 to 3000FPM	4"	355 lbs.

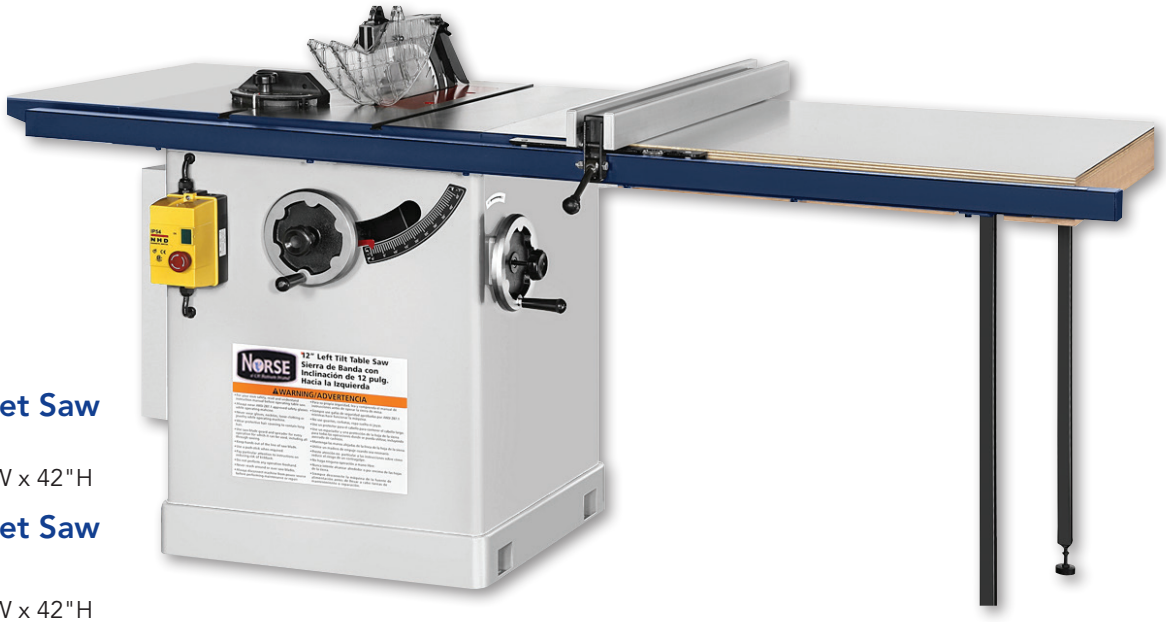

10" Left Tilt Cabinet Saw

ITEM# 9683413
Dimensions: 40"D x 77"W x 42"H

12" Left Tilt Cabinet Saw

ITEM# 9683415

Dimensions: 43"D x 80"W x 42"H

NORSE cabinet table saws offer precise cutting performance for all woods up to 3" thick for item 9683413 and 4" for item 9683416. Ruggedly constructed for continuous service. The saw features an extra large cast iron table with extensions for ripping a max of 50" to the right of the blade. For dado cuts a 5/8" diameter arbor and 5/8" diameter arbor extension along with a 1" arbor extension are included with the dado table insert (9683415). Max 13/16" dado capacity. The rip fence assembly is designed for simple one-hand maneuverability. Table height is 34" high.

- Left tilt or right tilt blade
- Machined cast iron table w/cast iron extensions:
  10" - 37"W x 27"D with 2 miter gauge slots
  12" - 48"W x 30"D with 2 miter gauge slots
- "T" Style rip fence assembly glides smoothly on front and rear rails
- Quick release blade guard system with riving knife and anti-kickback pawls
- Includes rip fence, miter gauge, 10" x 40 tooth general purpose blade, 5/8" dado extension, dado table insert
  12" x 40 tooth general purpose blade, 5/8" arbor extension, 5/8" dado extension, 1" arbor extension, dado table insert

		Cutting Depth		Ripping Capacity		Table			Dust	
Item #	Motor	90°	45°	Right	Left	w/Ext	Blade	Blade Speed	Port	Weight
9683413	3HP 230V 16A 1PH	3"	2-1/8"	50"	10"	37" x 27"	10" -5/8" Bore	4000 RPM	4"	515 lbs.
9683415	3HP 230V 16A 1PH	4"	2-3/4"	50"	9-1/8"	48" x 30"	12" -1" Bore	4000 RPM	4"	615 lbs.

10" Right Tilt Cabinet Saw

ITEM# 9683414
Dimensions: 40"D x 77"W x 42"H

12" Right Tilt Cabinet Saw

ITEM# 9683416
Dimensions: 43"D x 80"W x 42"H

NORSE cabinet table saws offer precise cutting performance for all woods up to 3" thick for item 9683413 and 4" for item 9683416. Ruggedly constructed for continuous service. The saw features an extra large cast iron table with extensions for ripping a max of 50" to the right of the blade. For dado cuts a 5/8" diameter arbor and 5/8" diameter arbor extension along with a 1" arbor extension are included with the dado table insert (9683416). Max 13/16" dado capacity. The rip fence assembly is designed for simple one-hand maneuverability. Table height is 34" high.

- Left tilt or right tilt blade
- Machined cast iron table w/cast iron extensions:
  10" - 37"W x 27"D with 2 miter gauge slots
  12" - 48"W x 30"D with 2 miter gauge slots
- "T" Style rip fence assembly glides smoothly on front and rear rails
- Quick release blade guard system with riving knife and anti-kickback pawls
- Includes rip fence, miter gauge, 10" x 40 tooth general purpose blade, 5/8" dado extension, dado table insert
  12" x 40 tooth general purpose blade, 5/8" arbor extension, 5/8" dado extension, 1" arbor extension, dado table insert

		Cutting Depth		Ripping Capacity		Table			Dust	
Item #	Motor	90°	45°	Right	Left	w/Ext	Blade	Blade Speed	Port	Weight
9683414	3HP 230V 16A 1PH	3"	2-1/8"	50"	10"	37" x 27"	10" -5/8" Bore	4000 RPM	4"	515 lbs.
9683416	3HP 230V 16A 1PH	4"	2-3/4"	50"	9-1/8"	48" x 30"	12" -1" Bore	4000 RPM	4"	615 lbs.

NORSE 10" Bench Top Table Saw ITEM# 9683412

Portable yet stationary, the NORSE 10" bench top table saw can be secured to a bench or mounted to the included stand. A powerful 15 Amp motor drives the 10" blade for ripping, cross cut or angle/bevel cuts. The right table extension allows the operator to cut up to 25-3/8" wide. This means you can easily rip a sheet of plywood in half. The blade guard and riving knife meet all UL safety standards for quick release and re-assembly.
Dimensions: 21"D x 16-1/2"W x 34"H

- 2HP 15 Amp 120V Motor
- Left tilt blade 0 to 45°
- Dual locking rip fence for accurate rip cuts
- Includes rip fence, miter gauge, blade and push stick

		Cutting Depth		Ripping Capacity		Table	Blade		Dust	
Item #	Motor	90°	45°	Right	Left	w/Ext	(L&W)	Blade Speed	Port	Weight
9683412	**2HP 120V 15 Amp**	**3-1/4"**	**2-1/4"**	**25-3/8"**	**8"**	**39" x 22-1/2"**	**10" -5/8" Bore**	**5000 RPM**	**1-1/4"**	**38 lbs.**

10" Left Tilt Contractor Saw ITEM# 9683410

NORSE 10" contractor table saws offer precise cutting performance for all woods up to 3-1/8" thick. Ruggedly constructed for continuous service. The saw features a 20" x 26" cast iron table with 10" x 26" stamped steel table extensions for ripping a max of 30" to the right of the blade. The rip fence assembly is designed for simple one-hand maneuverability with locking in the front and rear of the saw. Table height is 37" high. 4" Industrial casters are mounted to the base of the saw for maximum portability. Includes quick release blade guard system with adjustable riving knife. On-board storage for blade, rip fence, miter gauge, blade guard, anti-kick back pawls and line cord

Dimensions: 40"D x 57"W x 43"H

- Left tilt blade
- Machined cast iron table w/stamped steel extensions: 40"W x 26"D with 2 miter gauge slots
- Dual locking rip fence assembly glides smoothly on front and rear rails
- Quick release blade guard system with riving knife and anti-kickback pawls
- Includes rip fence, miter gauge, 10" x 40 tooth general purpose blade

		Cutting Depth		Ripping Capacity		Table			Dust	
Item #	Motor	90°	45°	Right	Left	w/Ext	Blade	Blade Speed	Port	Weight
9683410	**1-3/4HP 120/240V 15/7.5A 1PH**	**3-1/8"**	**2-3/16"**	**30"**	**13"**	**26" x 20"**	**10" x 5/8" Bore**	**3550 RPM**	**4"**	**250 lbs.**

Norse Radial Arm Saw

ITEM# 9683417

This radial arm saw is a unique tool as it performs many of the same functions as a table saw: ripping, crosscuts, dado, miter cuts and bevel cuts. The powerful direct drive 2HP motor gives you the power to cut material up to 3" thick at 90°. The saw will also accept a 10" blade with a 5/8" arbor. Once you release the switch, the saws braking system will stop the blade in just a few seconds. The large wooden top, 27" x 35" is easily replaced when the time comes.

Dimensions: 35"D x 35"W x 66"H

- Provides a variety of cuts: ripping, cross cutting, dados
- Automatic blade brake
- Sturdy steel stand
- Includes blade guard and anti-kickback pawls
- Saw arm uses ball bearings for head glide

Item #	Motor	Blade	12" Blade Max @ 90°	12" Blade Max @ 45°	Arbor	Table Dimensions	Bevel Stops	Weight
9683417	2HP 220V 6.5A 3400 RPM	12/10"	3"	2-1/4"	5/8" w/1" Bushing	27" x 35"	0,45°, 90°	398 lbs.

DUST COLLECTORS

NORSE Dust Collectors

650 CFM Dust Collector ITEM# 9686004

Dimensions: 20"D x 35"W x 61"H

1490 CFM Dust Collector ITEM# 9686006

Dimensions: 27"D x 36"W x 76"H

NORSE dust collectors help reduce dust particles in the air which can be hazardous to your health. They also keep your shop clean to prevent accidents. Model # 9686004 is lightweight and compact and can be connected to any tool. It includes a 22 gallon clear dust collection bag so you know when it needs to be emptied. The larger unit, 9686006 comes with a dual voltage motor and 1490 CFM to allow the user to connect two machines or connect to a shop dust collection system (not included). The 40-gallon collection bag may be reused or replaced. See below for replacement bags.

- 5-Micron filter bags
- Replaceable clear poly collection bags
- Portable, includes casters
- Locking rocker switch to prevent unauthorized use

Item #	Motor	CFM	Hose Size	Filter Bag	Collection Bag	Casters	Weight
9686004	3/4HP 120V 4.5A 1PH	650	4" x 78"	5 Micron	22 Gallon	2 x 6"	62 lbs.
9686006	2HP 120/240V 15/7.5A 1PH	1490	4" x 72"	5 Micron	40 Gallon	4 x 2"	112 lbs.

NORSE Replacement Bag for 9686004

ITEM# 9686008

NORSE Replacement Bag for 9686006

ITEM# 9686007

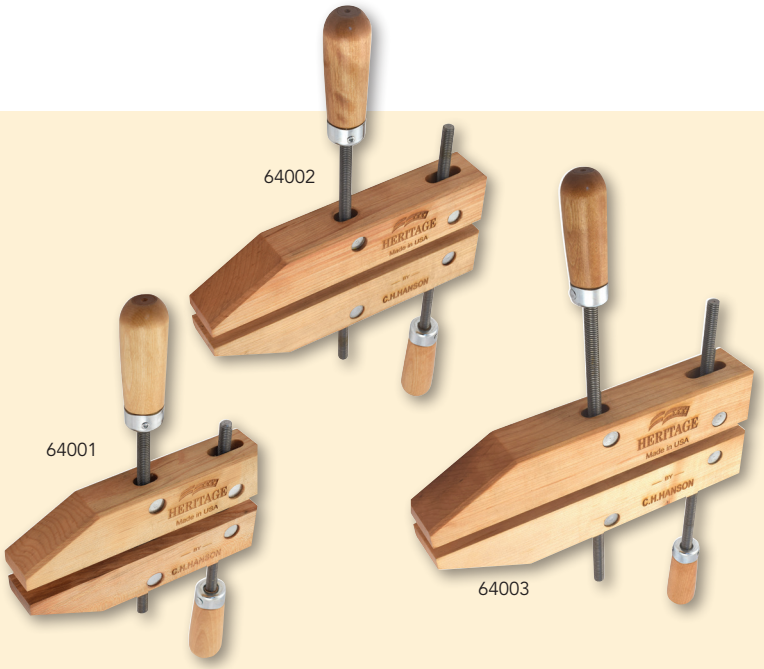

Heritage Wood Handscrew Clamps

- Made from quality North American rock maple or birch wood
- Manufactured in the USA for craftsmen everywhere
- Jaws adjust to any angle for clamping all surfaces

Item #	Description	Package
64001	8" Wood Handscrew Clamp	4 pieces
64002	10" Wood Handscrew Clamp	4 pieces
64003	12" Wood Handscrew Clamp	4 pieces

Heritage Spring Clamps

- Made with high quality forged American steel
- Manufactured in the USA
- Up to 30% stronger than imports
- Tang compression spring keeps the clamp jaws in alignment
- Available in 4 sizes, with and without protective tip

Item #	Description	Package
64011	1" Spring Clamps with Tips	12 pieces
64012	2" Spring Clamps with Tips	12 pieces
64013	3" Spring Clamps with Tips	6 pieces
64014	4" Spring Clamps with Tips	6 pieces
64021	1" Spring Clamps without Tips	12 pieces
64022	2" Spring Clamps without Tips	12 pieces
64023	3" Spring Clamps without Tips	6 pieces
64024	4" Spring Clamps without Tips	6 pieces

LAYOUT TOOLS

Magnetic Stud Finder™

- Powerful rare earth magnets locate metal and wood studs
- Rotating level for horizontal and vertical leveling
- No batteries required
- 6 each per case pack
- Ideal for remodeling, new construction, and DIY projects
- Compact design easily fits in your pocket

Item #	Description	Package
03040	Magnetic Stud Finder™	Carded

Angle Snap®

- Unique layout tool
- Accurately measures and marks sheet goods like plywood and drywall
- Measures in Degrees and Pitches
- Comes with chalk reel
- Easy 1 person marking - two adjustable grip pins anchor tool on desired mark
- Measure angles - use as protractor for finding angles and roof pitches
- 6 each per case pack

Item #	Description	Package
03070	AngleSnap®	Carded

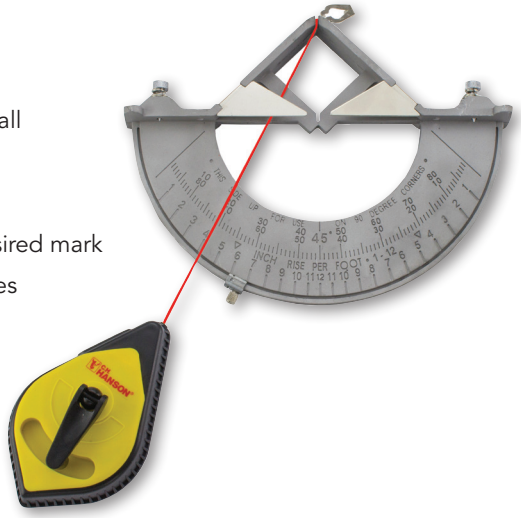

Pivot Square®

- Precision measurement tool
- Pivots to easily measure or mark any angle
- Locks in angles
- Quickly find roof pitch
- Has three vials to determine roof pitches, indicate grade, and allow for leveling and plumbing
- 4 each per case pack

Item #	Description	Package
03060	Machined Aluminium Pivot Square®	Clam Shell
00203_PUR	Pivot Square® User's Guide	Box
03065	Resin Pivot Square®	Carded

Slide Square®

- This square is the one tool that easily and accurately solves all your layout needs
- Marks accurate anchor bolt hole locations onto 2" x 4" and 2" x 6" sill plates
- Marks right angles with positive stop at 90°
- Mark common, hip, and valley roof cuts and angles
- Fits in your pocket
- 6 each per case pack

Item #	Description	Package
03050	Slide Square®	Carded

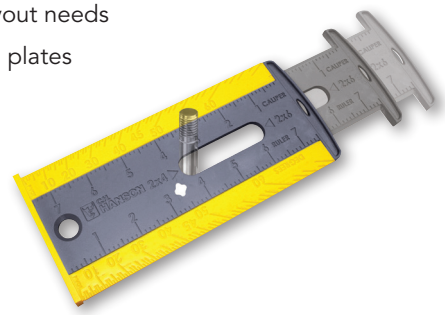

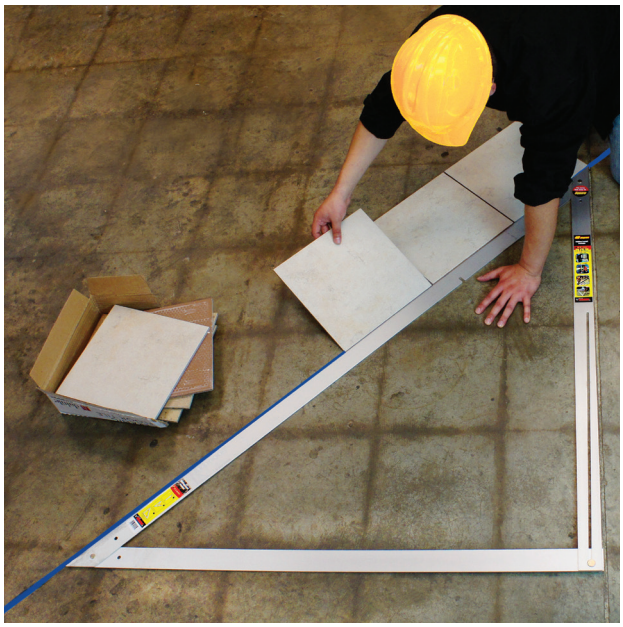

Heavy Duty Aluminum Folding Layout Asquare

- Aircraft Aluminum construction
- Collapsing triangle for easy storage
- Easy to use, for quick and accurate work

3'x4'x5' 90°

- Only true 3' x 4' x 5' square with accuracy within 1/32"
- Uses: Carpentry, angle layout, squaring, framing timber, and much more

54" 45°

- Provides true 90° angle and two 45°angles in a folding layout square

Item #	Description	Package
00345	3'x4'x5' 90° Heavy Duty Alum. Folding Layout Asquare	Tube
34502	3'x4'x5' 90° Heavy Duty Alum. Folding Layout Asquare (3 pack per Tube)	Tube
00045	54" 45° Heavy Duty Alum. Folding Layout Asquare	Tube
45002	54" 45° Heavy Duty Alum. Folding Layout Asquare (3 pack per Tube)	Tube

MARKING

RETRACTABLE PENCIL PULL®

- Self retractable pencil holder
- Holds carpenter pencils, crayons, pens, markers and more
- Easily clips on belt, pocket or shirt
- Loaded on a clip strip of 12 each per case pack

Item #	Description	Package
10570	Retractable Pencil Pull® Pencil Holder	Clip strip

Stop looking for your pencil, this is one tool you don't think you need to try it

CARPENTER PENCILS

- Perfect for marking fine lines, molding, saw lines, drill points, etc.
- Must be ordered in case pack quantities

Item #	Description	Case Pack	Package
10378	Hard Lead	72	Boxed
10379	Soft Lead	72	Boxed
10380	Medium Lead	72	Boxed
10231	Red Lead Carpenter's Pencil	72	Boxed
10316	Economy Medium Basswood	72	Boxed
10560-PUR	Sure-Point™ Finish Carpenter's Pencil (Round)	144	Boxed
10561	Finish Pencil, Red, Lacquered (Round)	144	Boxed

VERSASHARP

- Sharpens carpenter pencils, lumber crayons, and standard pencils
- Ergonomically designed

Item #	Description	Package
00202	VersaSharp™ Sharpener-25 count	Display Box
00208	VersaSharp™ Fish Bowl - 25 count	Carded

COMBO MARK

- Double-ended marking tool combines carpenter pencil with lumber crayon
- Marks wood, concrete, metal, or glass
- 24 each per case pack

Item #	Description	Package
10456	Combo Mark with yellow lumber crayon	Bulk
10457	Combo Mark with red lumber crayon	Bulk
10458	Combo Mark with blue lumber crayon	Bulk

PENCIL SHARPENER/COMBO

- 15 ProSharp™ Pencil Kit contains: 15 of our best selling medium lead round finishing pencils with erasers, ProSharp™ chuckable pencil sharpener and re-usable storage tube
- Case Pack: 02010 -9 tubes per case pack, 00206 / 12 each per case pack, 00221 / 12 each per case pack

Item #	Description	Package
00213	10 Hanson Pencils with 1 VersaSharp	Tube
02010	ProSharp™ with 15 pencils	Tube
00206	Combo 2 Pencils with VersaSharp™	Carded
00221	6 Hanson Pencils with 1 VersaSharp	Carded

PENCIL ARMOR®

- Helps prevent pencil from breaking. Includes Heavy Duty Pocket Clip
- Case Pack: 10405 - 24 each per case pack / 00118 - 12 each per case pack

Item #	Description	Package
10405	Pencil Armor®	Display Box

WOOD LUMBER CRAYON HOLDER

- Securely holds crayon for better control
- Prevents crayon from breaking and allows use of full crayon
- 12 each per case pack

Item #	Description	Package
10387	Wood Lumber Crayon - Holder	Bulk

LUMBER CRAYONS

- 1/2" hexagon x 4.5" long

Premier - Boxed 12 - Marks lumber and most other surfaces

- No Melt Crayon withstands 300°F - Weather/fade/sun resistant

Item #	Description	Package
10382	Red Premier	Boxed
10383	Blue Premier	Boxed
10384	Black Premier	Boxed
10385	Yellow Premier	Boxed

Standard - Boxed 12 - For marking wood, metal, concrete

Item #	Description	Package
10365	Red Standard	Boxed
10366	Blue Standard	Boxed
10367	Black Standard	Boxed
10368	Yellow Standard	Boxed
10370	White Standard	Boxed

Standard - 2 pk. Carded

Item #	Description	Package
10352	Blue	Carded
10353	Black	Carded
10356	Red	Carded
10386	Yellow	Carded

Promising Focus On YOU, Our Customer, In Today's Busy World

After 150+ years, I can say our company has changed a lot since it was founded by my great grandfather, Christian Henry Hanson, in 1866. We have grown out of several facilities and introduced thousands of new products; but one thing that has never wavered is our commitment to the customer. We work each day to Glorify God by delivering on our promise to help you succeed.

We strive to be...

INNOVATIVE
Always improving, always creating

AVAILABLE
Get what you need, when you need it

ECONOMICAL
High performance at the most competitive price

TRUSTWORTHY
Always doing the right thing

Your partners at C.H. Hanson will continue to bring you solutions that support your business today and well into the future!

Blessings,

Phil Hanson
President, C.H. Hanson

OUR FAMILY OF PRODUCTS

PALMGREN® a CH Hanson brand
www.palmgren.com

NORSE a CH Hanson brand

C.H. HANSON®
www.chhanson.com

2000 N. Aurora Road, Naperville, IL 60563
P: 800-827-3398 | F: 800-827-5834 | E: sales@chhanson.com