Yorkshire

Model # 4822

Yorkshire 2ft Window Box

DESCRIPTION

The Yorkshire window box helps you bring home the charm of the East Coast while offering a low maintenance solution. Compliment the appearance of your home with a product that cleans up with the simple rinse of a garden hose.

- Features a double wall design creating a water reservoir
- 100% high-grade vinyl with built in UV inhibitors
- Ready-to-assemble kit requires minor assembly
- Weather resistant, low maintenance vinyl
- Includes 2 wall mount brackets with a black powder coated finish
- Warranty: 15-Yr Residential Use / 5-Yr Commercial Use

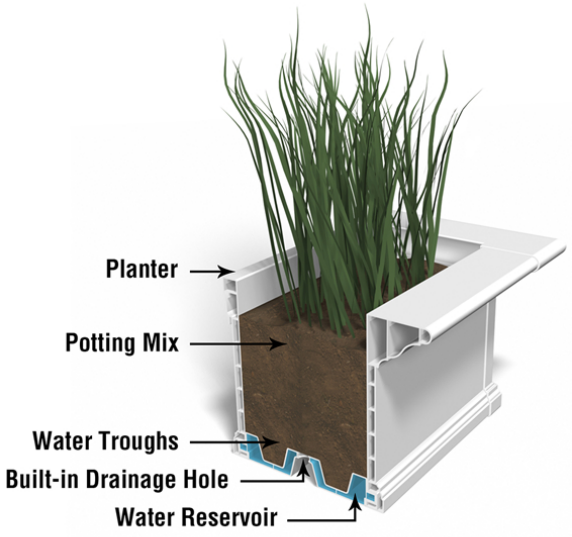

PRODUCT DIMENSIONS

Outside Dimensions: 24in L x 12.1in W x 10.2in H (61cm x 30.7cm x 25.9cm)
Inside Dimensions: 17.4in L x 7.6in W x 8.4in D (44.1cm x 19.3cm x 21.3cm)
Soil Capacity: 5 Gallons (18.9 Liters)
Water Reservoir Capacity: 0.5 Gallons (1.8 Liters)
Part Weight: 10lbs (4.5kg)
Material: PVC

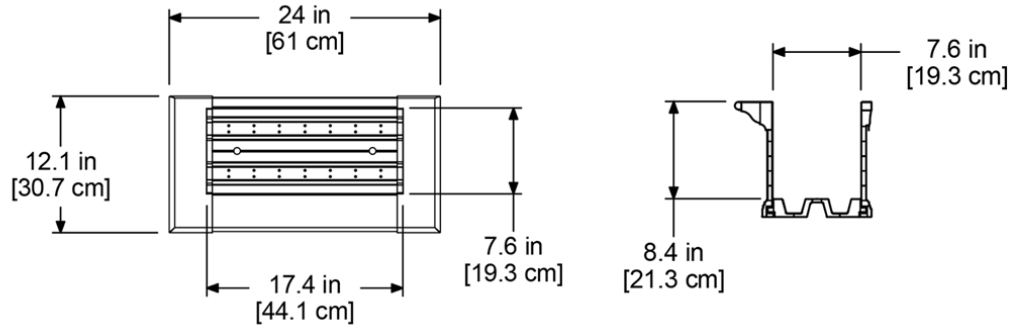

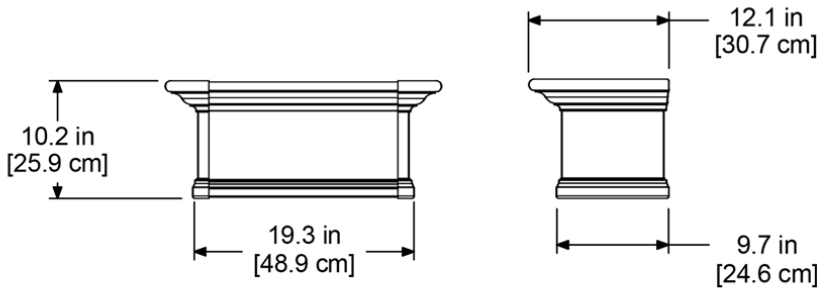

MAYNE®
Outdoor Products *of* Distinction

7024 Kilbourne Rd - Unit A London, ON N6P 1K6
Tel: 866-363-8834 | www.gomayne.com
customerservice@gomayne.com