80V 16” Cordless String Trimmer
ST80L00
(2102602)

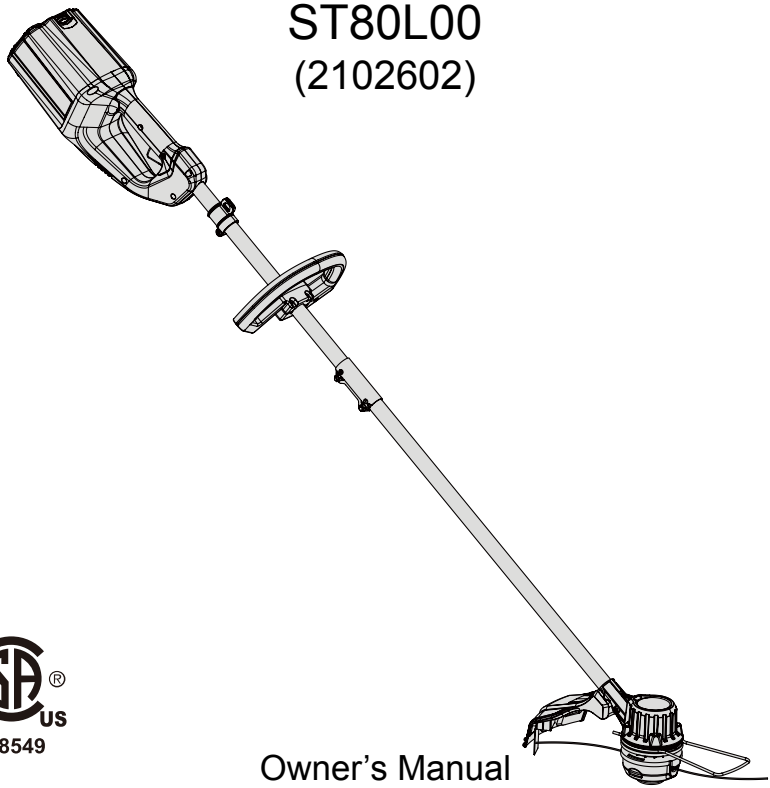

218549

Owner’s Manual

TOLL-FREE HELPLINE: 1-855-345-3934

www.greenworkstools.com/80v-pro

⚠ Read all safety rules and instructions carefully before operating this tool.

CONTENTS

Contents 2
Product Specifications 2
Important Safety Instructions 3
Symbols 6
Know Your String Trimmer 8
Assembly 10
Operation 16
Battery & Charger Maintenance 24
Maintenance 26
Environmentally Safe Battery Disposal 27
Troubleshooting 28
Warranty 30
Exploded View and Part List 31

PRODUCT SPECIFICATIONS

80V 16" CORDLESS STRING TRIMMER

Type ..... Cordless, battery powered
Motor ..... 80V Brushless
Cutting Width ..... 14 in. /16 in. (35.6 cm / 40.6 cm)
Line Diameter ..... Nylon / 0.080" (2 mm)
Speed ..... 6200 (±10%)RPM
Feed Type ..... Bump Feed
Weight (without battery) ..... 7.1 lbs (3.2 kg)

IMPORTANT SAFETY INSTRUCTIONS

⚠ W A R N I N G

Read and understand all instructions before using this product. Failure to follow all instructions listed below may result in electric shock, fire, and/or serious personal injury.

- Use only identical manufacturer's replacement parts and accessories. Use of any other parts may create a hazard or cause product damage.
- Always wear safety glasses with side shields marked to comply with ANSI Z87.1. Everyday glasses have only impact resistant lenses. They are NOT safety glasses. Following this rule will reduce the risk of eye injury. Use face mask if operating in dusty work spaces.
- Avoid Dangerous Environment — Don't expose power tools to damp or wet conditions. Water entering a power tool will increase the risk of electric shock.
- Don't use in rain.
- Keep all bystanders, children, and pets at least 50 ft. away.
- Do not use the power tools for any job except that for which it is intended.
- Avoid Unintentional Starting – Do not carry string trimmer with fingers on the switch. Be sure the battery is removed while transporting.
- Do not operate the equipment while barefoot or when wearing sandals or similar lightweight footwear. Wear protective footwear that will protect your feet and improve your footing on slippery surfaces.
- Don't overreach - Keep proper footing and balance at all times.
- Stay alert - Watch what you are doing. Use common sense. Do not operate this unit when you are tired, ill or under the influence of alcohol, drugs or medication.
- Always store idle power tools indoors - When not in use, power tools should be stored indoors in a dry place, out of reach of children.
- Power tool maintenance – Replace string head if cracked, chipped, or damaged in any way. Be sure the string head is properly installed and securely fastened. Keep cutting edge sharp and clean for best performance and to reduce the risk of injury. Follow instructions for lubricating and changing accessories. Inspect appliance cord periodically, and if damaged, have it repaired by an authorized service facility. Inspect extension cords periodically and replace if damaged. Keep handles dry, clean, and free from oil and grease. Failure to do so can cause serious injury.
- Check Damaged Parts – Before further use of the appliance, a guard or other part that is damaged should be carefully checked to determine that it will operate properly and perform its intended function. Check for alignment of moving parts, binding of moving parts, breakage of parts, damaged mountings, and any other condition that may affect its operation. A guard or other part that is damaged should be properly repaired or replaced by an authorized service center unless indicated elsewhere in this manual.
- Do not charge or operate cordless tools in damp or wet locations or in the rain. Following this rule will reduce the risk of electric shock.
- Remove or disconnect battery before servicing, cleaning or removing material from the gardening appliance.

- Do not dispose of the batteries in a fire. The cells may explode. Check with local codes for possible special disposal instructions.
- Do not open or mutilate the batteries. Released electrolyte is corrosive and may cause damage to the eyes or skin. It may be toxic if swallowed.
- Exercise care in handling batteries in order not to short the battery with conducting materials such as rings, bracelets, and keys. The battery or conductor may overheat and cause burns.
- Dress Properly – Do not wear loose clothing or jewelry. They can be caught in moving parts. Use of rubber gloves and substantial footwear is recommended when working outdoors. Wear protective hair covering to contain long hair.
- Do not add unnecessary force to your power tool – It will do the job better and with less likelihood of a risk of injury at the rate for which it was designed.
- Recharge only with the charger specified by the manufacturer. A charger that is suitable for one type of battery pack may create a risk of fire when used with another battery pack.
- For use only with (2901302, 2902402) battery. For use only with (2901402, 2903702) charger.
- When battery pack is not in use, keep it away from other metal objects, like paper clips, coins, keys, nails, screws or other small metal objects, that can make a connection from one terminal to another. Shorting the battery terminals together may cause a fire.
- Under abusive conditions, liquid may be ejected from the battery; avoid contact. If contact accidentally occurs, flush with water. If liquid contacts eyes, additionally seek medical help. Liquid ejected from the battery may cause irritation or burns.
- Do not use a battery pack or appliance that is damaged or modified. Damaged or modified batteries may exhibit unpredictable behavior resulting in fire, explosion or risk of injury.
- Do not expose a battery pack or power tools to fire or excessive temperature. Exposure to fire or temperature above 265°F (130°C) may cause explosion.

⚠ W A R N I N G (PROPOSITION 65)

Some dust created by power sanding, sawing, grinding, drilling, and other construction activities contains chemicals known to cause cancer, birth defects or other reproductive harm. Some examples of these chemicals are:

- Lead from lead-based paints
- Crystalline silica from bricks and cement and other masonry products, and
- Arsenic and chromium from chemically treated lumber.

Your risk of exposure to these chemicals varies depending on how often you do this type of work. To reduce your exposure to these chemicals, work in a well-ventilated area, and work with approved safety equipment, such as dust masks that are specially designed to filter out microscopic particles.

SAVE THESE INSTRUCTIONS

SYMBOLS

Some of the following symbols may be used on this product. Please study them and learn their meaning. Proper interpretation of these symbols will allow you to operate the product better and safer.

SYMBOL	NAME	DESIGNATION/EXPLANATION
V	Volts	Voltage
A	Amperes	Current
Hz	Hertz	Frequency (cycles per second)
W	Watts	Power
min	Minutes	Time
∿	Alternating Current	Type of current
⎓	Direct Current	Type or a characteristic of current
	No Blade	Do not install or use any type of blade on a product or displaying this symbol.
/min	Per Minute	Revolutions, strokes, surface speed, orbits etc., per minute.
	Wet Conditions Alert	Do not expose to rain or use in damp locations.
	Read The Operator's Manual	To reduce the risk of injury user must read and understand operator's manual before using this product.
	Eye Protection	Always wear eye protection with side shields marked to comply with ANSI Z87.1 when operating this equipment.
	Safety Alert	Precautions that involve your safety.
	Ricochet	Thrown objects can ricochet and result in personal injury or property damage.
	Keep Bystanders Away	Keep all bystanders at least 50 ft. away.

SYMBOLS

The following signal words and meanings are intended to explain the levels of risk associated with this product.

SYMBOL	SIGNAL	MEANING
	DANGER	Indicates an imminently hazardous situation, which, if not avoided, will result in death or serious injury.
	WARNING	Indicates a potentially hazardous situation, which, if not avoided, could result in death or serious injury.
	CAUTION	Indicates a potentially hazardous situation, which, if not avoided, may result in minor or moderate injury.
	CAUTION	(Without Safety Alert Symbol) Indicates a situation that may result in property damage.

SERVICE

Servicing requires extreme care and knowledge and should be performed only by a qualified service technician. For service we suggest you return the product to your nearest **AUTHORIZED SERVICE CENTER** for repair. Use only identical manufacturer's replacement parts and accessories.

⚠ W A R N I N G

To avoid serious personal injury, do not attempt to use this product until you have read this Owner's Manual thoroughly and understand it completely. If you do not understand the warnings and instructions in this Owner's Manual, do not use this product. Call the Toll-free Helpline (1-855-345-3934) for assistance. The operation of any power tool can result in foreign objects being thrown into your eyes, which can result in severe eye damage. Before operating a power tool, always wear safety goggles, safety glasses with side shields, or a full face shield when needed. We recommend a Wide Vision Safety Mask for use over eyeglasses or standard safety glasses with side shields. Always use eye protection that is marked to comply with ANSI Z87.1.

⚠ W A R N I N G

The operation of any power tool can result in foreign objects being thrown into your eyes, which can result in severe eye damage. Before beginning power tool operation, always wear safety goggles or safety glasses with side shields and, when needed, a full face shield. We recommend Wide Vision Safety Mask for use over eyeglasses or standard safety glasses with side shields. Always use eye protection which is marked to comply with ANSI Z87.1.

SAVE THESE INSTRUCTIONS

KNOW YOUR STRING TRIMMER

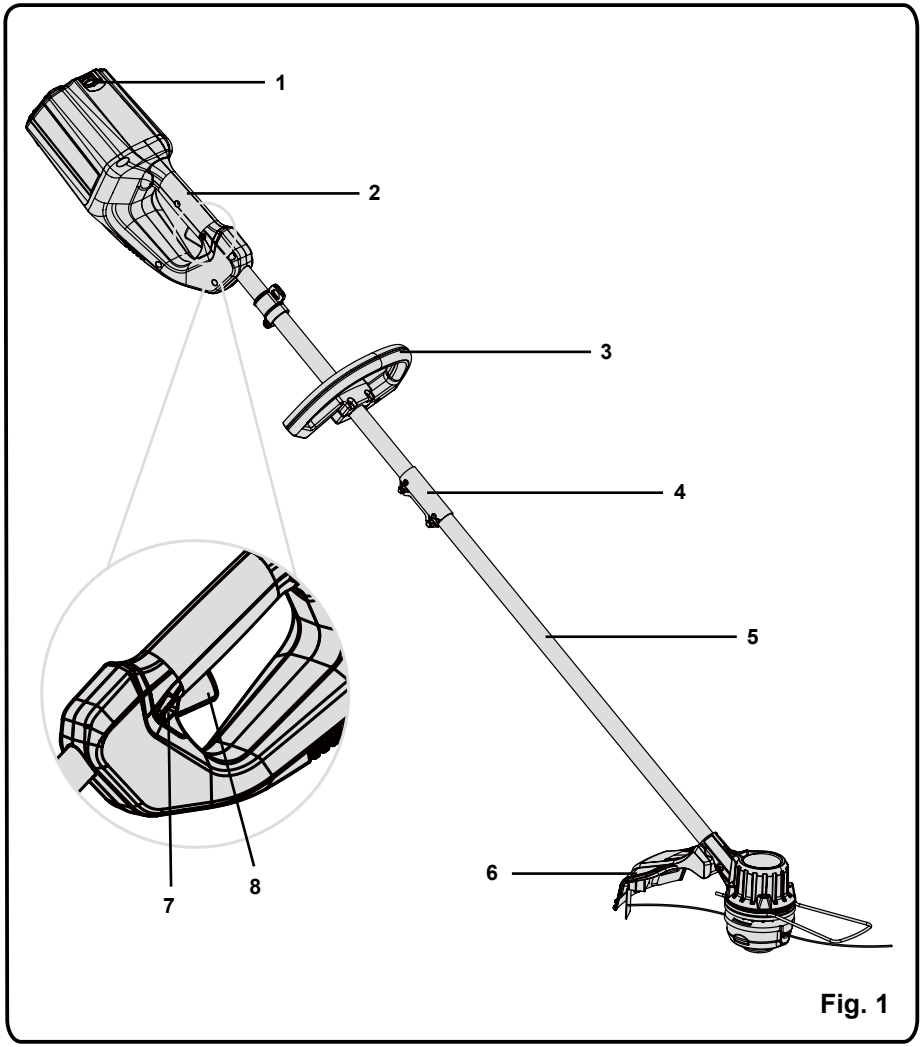

Fig. 1

KNOW YOUR STRING TRIMMER *(See Figure 1.)*

The safe use of this product requires an understanding of the information on the product and in this operator's manual as well as a knowledge of the project you are attempting. Before use of this product, familiarize yourself with all operating features and safety rules.

1. BATTERY PACK LATCH

Press to release the battery pack from the tool.

2. REAR HANDLE

Ergonomic handle with overmold improves comfort and grip.

3. AUXILIARY HANDLE

The string trimmer is equipped with an auxiliary handle for ease of operation and to prevent loss of control.

4. COUPLER

The coupler connects and locks the two shafts.

5. TRIMMER SHAFT

The trimmer shaft encloses and protects the cables between the motor and rear handle.

6. GUARD

The trimmer includes a guard that helps protect from flying debris.

7. LOCK-OUT BUTTON

The lock-out button prevents accidental starting.

8. SWITCH TRIGGER

To turn the string trimmer On and Off.

ASSEMBLY

UNPACKING

This product requires assembly.

- Carefully remove the product and any accessories from the box. Make sure that all items listed in the packing list are included.
- Inspect the tool carefully to make sure no breakage or damage occurred during shipping.
- Do not discard the packing material until you have carefully inspected and satisfactorily operated the tool.
- If any parts are damaged or missing, please call 1-855-345-3934.

⚠ W A R N I N G

Do not use this product if any parts on the packing list are already assembled to your product when you unpack it. Parts on this list are not assembled to the product by the manufacturer and require customer installation. Use of a product that may have been improperly assembled could result in serious personal injury.

PACKING LIST

Part Name	Figure	Qty
String trimmer	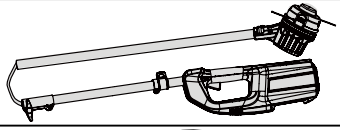	1
Auxiliary handle	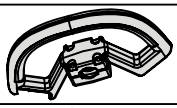	1
Guard	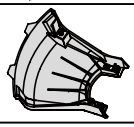	1
Edge guide		1
Operator's manual		1

⚠ W A R N I N G

If any parts are damaged or missing, do not operate this product until the parts are replaced. Use of this product with damaged or missing parts could result in serious personal injury.

⚠ W A R N I N G

Do not attempt to modify this product or create accessories not recommended for use with this string trimmer. Any such alteration or modification is misuse and could result in a hazardous condition leading to possible serious personal injury.

⚠ W A R N I N G

Do not connect to power supply until assembly is complete. Failure to comply could result in accidental starting and possible serious personal injury.

ATTACHING THE EDGE GUIDE

The edge guide can limit the cutting range of the cutting line and reduce the risk of the rotating cutting line causing damage.

To use the edge guide, press the edge guide onto the trimmer head.

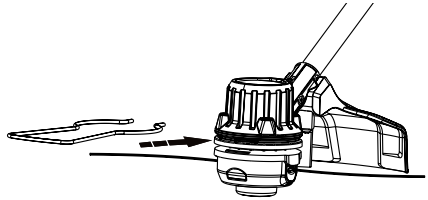

Fig. 2.1

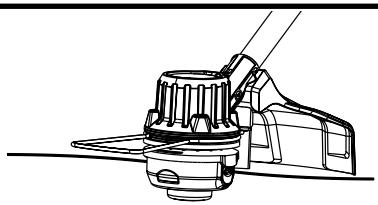

Fig. 2.2

ASSEMBLY

ATTACHING THE GUARD (See *Figure 3.*)

NOTE: Install the guard before the attachment is connected to the lower shaft.

1. Invert the string trimmer to access the trimmer head.
2. Remove supplied screws (1) from the trimmer head (4) with a philips head screwdriver (not included).

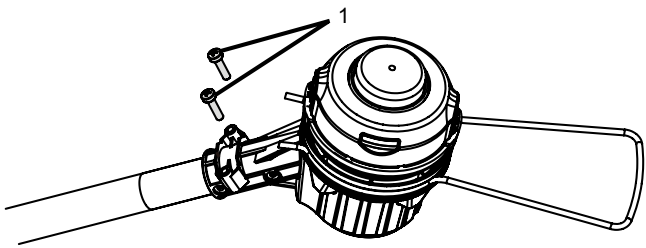

Fig. 3.1

3. Place the guard (2) on to the trimmer head.
4. Align the screw holes on the guard (3) with the screw holes on the trimmer head (4)

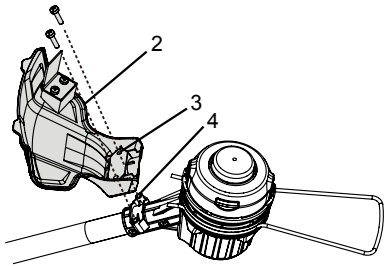

Fig. 3.2

5. Insert the screws into the trimmer head, fastening the guard in place using a philips head screwdriver (not included).

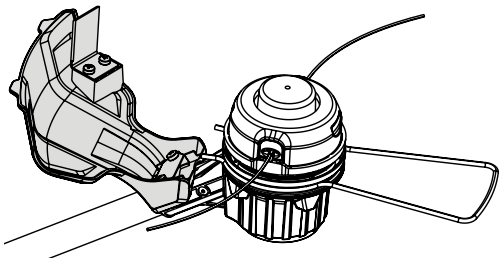

Fig. 3.3

INSTALLING THE UPPER SHAFT TO THE LOWER SHAFT (See *Figure 4*.)

⚠ W A R N I N G

Never install, remove, or adjust any attachment while string trimmer is running. Failure to stop the motor can cause serious personal injury.

The attachment connects to the power head by means of a coupler device.

1. Set the unit on a flat, level surface.
2. Loosen the knob (1) on the coupler (5).
3. Push in the release button (2) located on the lower shaft (3). Align the release button with the positioning hole (4) and slide the two shafts together. Rotate the lower shaft until the button locks into the positioning hole.

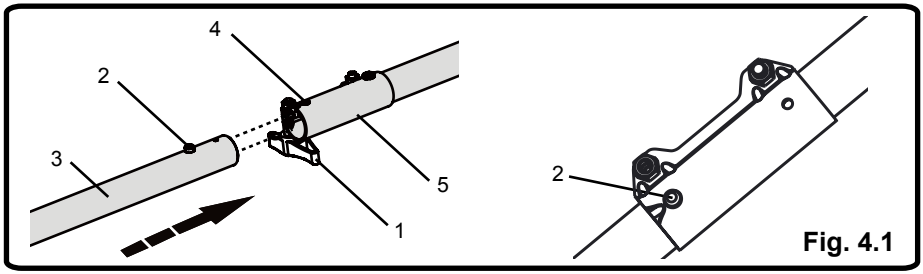

Fig. 4.1

***NOTE**: If the button does not release completely in the positioning hole, the shafts are not locked into place. Slightly rotate from side to side until the button is locked into place.*

4. Tighten the knob securely.

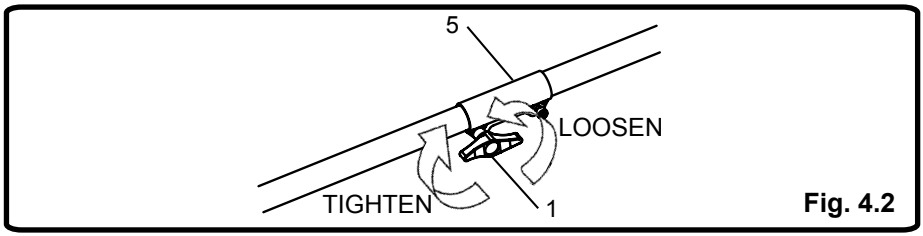

Fig. 4.2

ATTACHING THE AUXILIARY HANDLE (See *Figure 5*.)

1. Loosen the four screws (1) in the handle with a philips screwdriver (not included) and remove the screws from the handle.

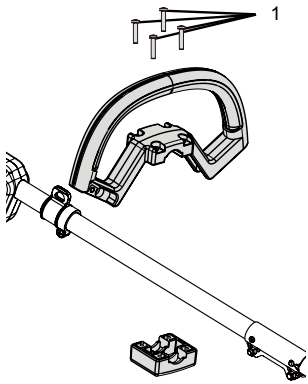

Fig. 5.1

2. Attach the auxiliary handle (2) and lower clamp (3) on the shaft.
3. Adjust handle up or down, if necessary, to desired operating position.

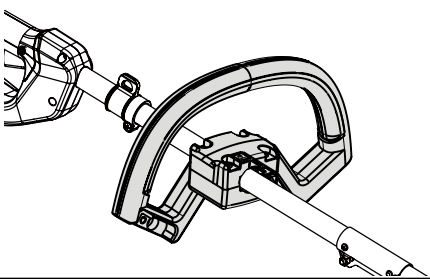

Fig. 5.2

4. Tighten the four screws so that the handle cannot be rotated on the shaft.

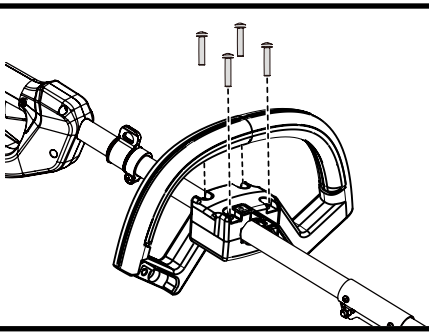

Fig. 5.3

ADJUSTING THE CUTTING SWATH (See *Figure 6.*)

This trimmer is equipped with a line cut-off blade on the guard. The line cut off blade continuously trims the line to ensure a consistent and efficient cut diameter. Advance line whenever you hear the engine running faster than normal, or when trimming efficiency diminishes. This will maintain best performance and keep line long enough to advance properly.

This trimmer is currently set at the 14 in. cutting swath. To adjust to a cutting swath of 16 in.:

- Remove the battery pack.
- Loosen the blade screw then rotate the line cut-off blade 180°.
- Tighten the blade screw.

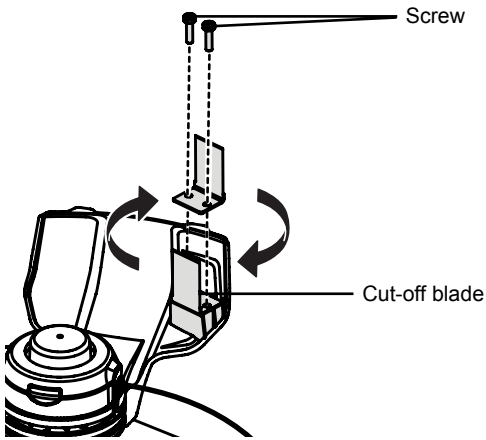

Fig. 6

⚠ W A R N I N G

Read and understand entire Operator's Manual for each optional attachment used on this power head and follow all warnings and instructions. Failure to follow all instructions may result in electric shock, fire and/or serious personal injury.

⚠ W A R N I N G

Do not allow familiarity with this product to make you careless. Remember that a careless fraction of a second is sufficient to inflict serious injury.

⚠ W A R N I N G

Do not use any attachments or accessories not recommended by the manufacturer of this product. The use of attachments or accessories not recommended can result in serious personal injury.

⚠ W A R N I N G

This string trimmer is not meant to be used with brush cutter attachments. Use of a brush cutter attachment could cause serious personal injuries or property damage.

INSTALLING THE BATTERY PACK (See *Figure 7.*)

• Insert battery pack into tool until an audible click is heard.

REMOVING THE BATTERY PACK (See *Figure 7.*)

• Depress the battery release button (1) in the back of the battery pack and pull battery pack out of tool.

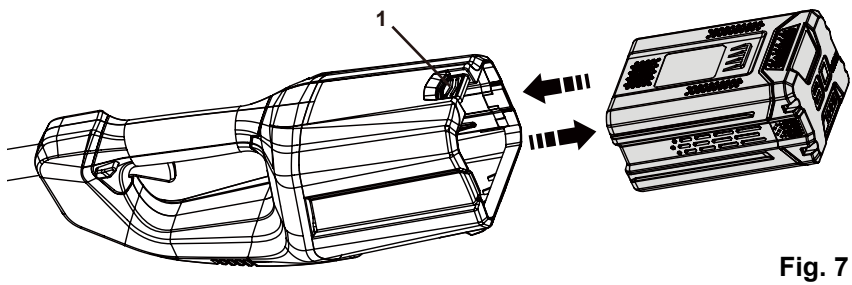

Fig. 7

STARTING AND STOPPING THE TRIMMER (See *Figure 8.*)

• Ensure a fully charged battery is installed into the string trimmer.

• To start the string trimmer, press and hold the safety lock button (1) and squeeze the switch trigger (2).

• To stop the string trimmer, release switch trigger to stop.

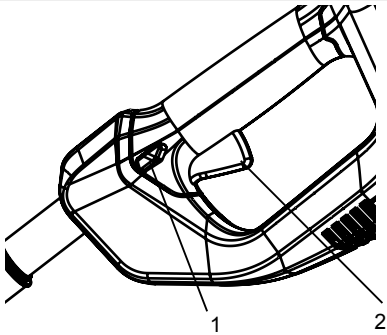

Fig. 8

OPERATING THE TRIMMER (See *Figure 9.*)

⚠ W A R N I N G

Always hold the string trimmer away from the body keeping clearance between the body and the string trimmer. Any contact with the string trimmer cutting head while operating can result in serious personal injury.

Follow these tips when using the string trimmer:

• Hold the trimmer with your right hand on the reat handle and your left hand on the auxiliary handle.

• Keep a firm grip with both hands while in operation.

• Trimmer should be held at a comfortable position with the rear handle about hip height.

• Cut tall grass from the top down. This will prevent grass from wrapping around the shaft housing and string head which may cause damage from overhearing.

If grass becomes wrapped around the string head:

• Remove the battery pack.

• Remove the grass.

Fig. 9

⚠ W A R N I N G

Any contact with the attachment cutting head can result in burns and/or other serious personal injury.

⚠ W A R N I N G

Read the safety information for safe operation when using a blade attachment and refer to the safety rules and instructions in your attachment manual. Never use a brush cutter attachment with this electric power head. Improper operation of a blade or any attachment could result in serious injury.

ADVANCING LINE (See *Figure 10.*)

While the string trimmer is operating, the cutting line gets worn down and becomes shorter. This trimmer is equipped with bump feed line advancement, which advances additional line once the head is bumped on the ground while rotating. The cutting blade will cut the line to keep an accurate cutting swath.

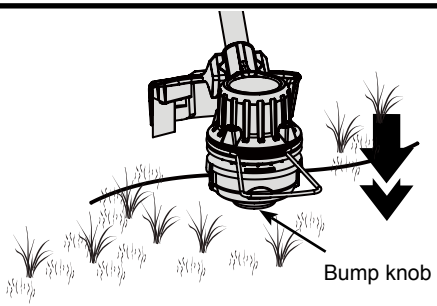

Fig. 10

REPLACING THE LINE (See *Figure 11.*)

1. Press the tabs simultaneously on the side of the trimmer head and remove cover and spool.

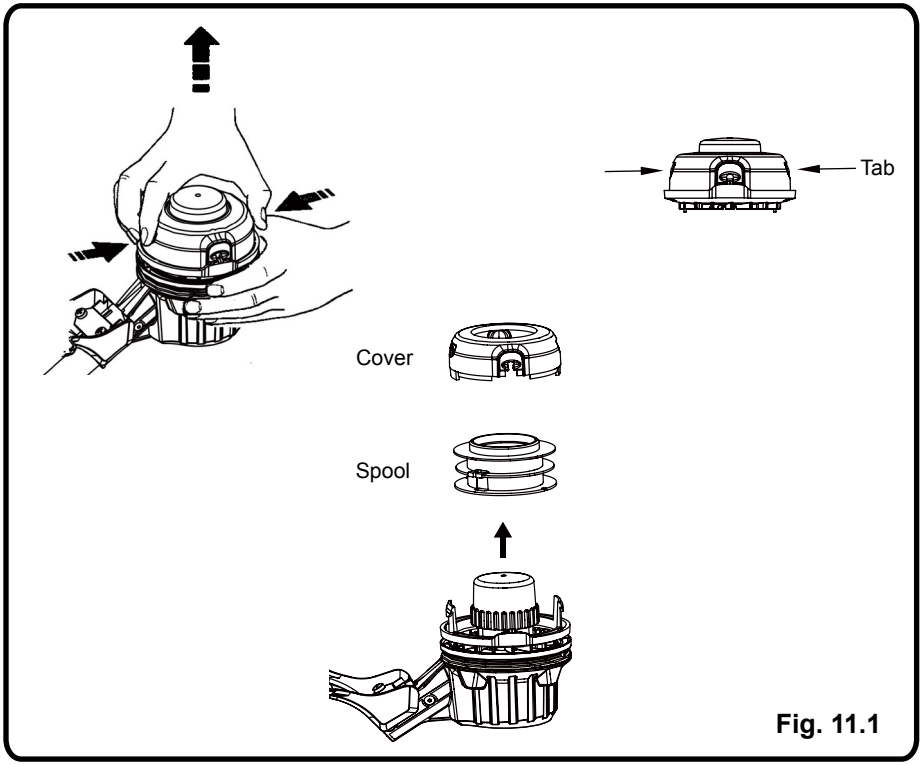

Fig. 11.1

2. Remove any remaining line.
3. Clean dirt and debris from all parts. Replace spool if it is worn or damaged.
4. Replace with a pre-wound spool, or replace line using 25 feet (8 meters) of 0.080 inch (2.0 mm) diameter line.

⚠ W A R N I N G

Never use wire, rope, string, etc., which can break off and become a dangerous projectile.

5. When installing new line on an existing spool, hold the spool as shown.

6. Bend the line at the midpoint and insert the bend into the slot in the center rim of the spool. Ensure line snaps into position in the slot.

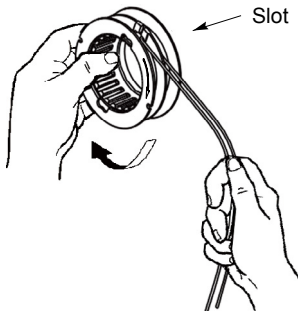

Fig. 11.2

7. With your finger between the lines, wrap the lines evenly and firmly around the spool in a clockwise direction.

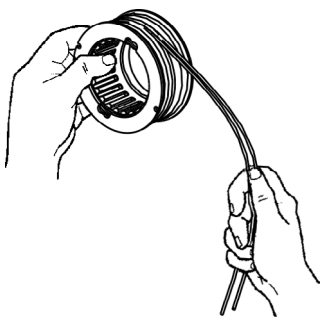

Fig. 11.3

8. Position the lines in the guide slots.

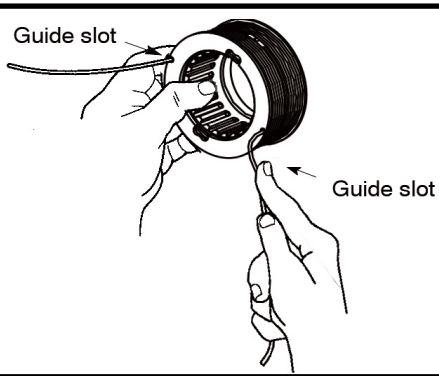

Fig. 11.4

9. Place the spool in the cover as shown below.

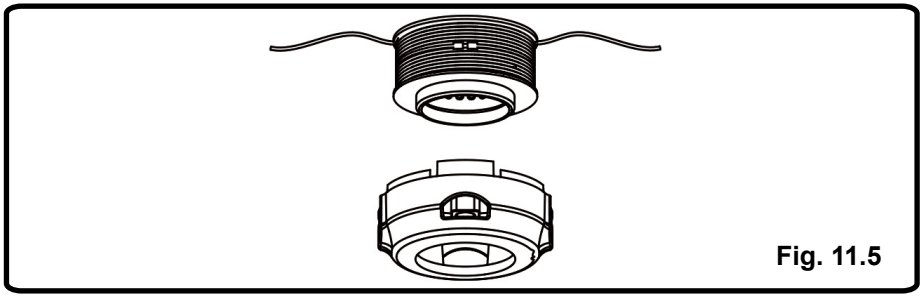

Fig. 11.5

10. Insert the ends of the lines through the line exit holes in the sides of the cover.

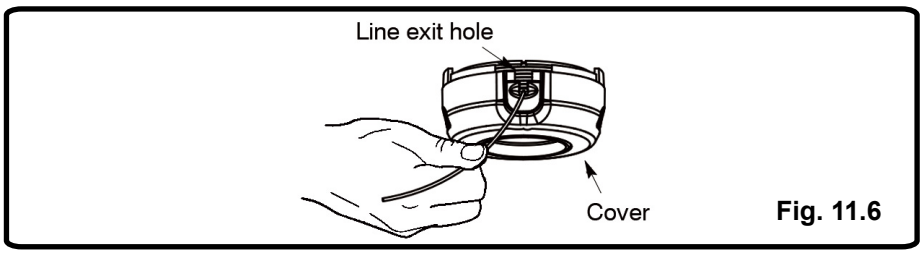

Fig. 11.6

11. Reinstall the spool and cover onto the trimmer head. Push until cover snaps into place.

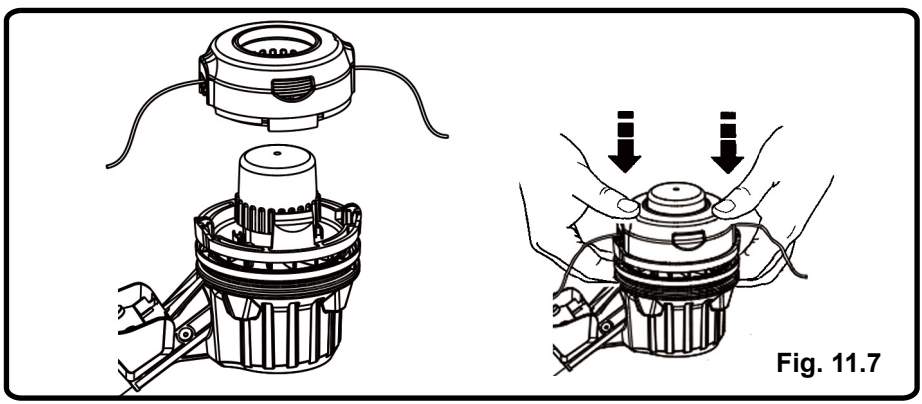

Fig. 11.7

CUTTING TIPS (See *Figure 12*.)

- Keep the trimmer tilted toward the area being cut; this is the best cutting area.
- The trimmer cuts when passing the unit from right to left. This will avoid throwing debris at the operator. Avoid cutting in the dangerous area shown in figure 11.
- Use the tip of string to do the cutting; do not force string head into uncut grass.
- Wire and picket fences cause extra string wear and breakage. Stone and brick walls, curbs, and wood may wear string rapidly.
- Avoid trees and shrubs. Tree bark, wood moldings, siding, and fence posts can easily be damaged by the string.

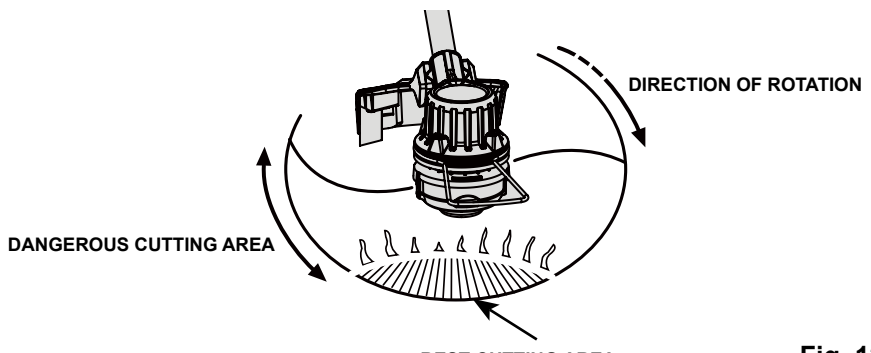

Fig. 12

BATTERY & CHARGER MAINTENANCE

CHECKING BATTERY CAPACITY

Press the battery capacity indicator (BCI) button. The lights will illuminate according to the batteries capacity level. See chart below:

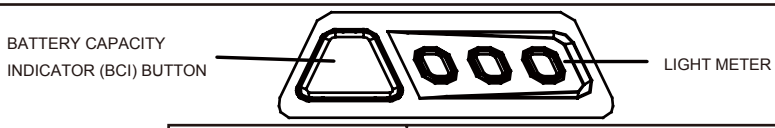

Lights	Capacity
3 Green Lights	The battery is more than 75% capacity
2 Green Lights	The battery is between 35% and 75% capacity
1 Green Light	The battery is less than 35% capacity
Lights go out	The battery requires charging immediately

CHARGING PROCEDURE

NOTE: The battery is not shipped fully charged. It is recommended to fully charge before first use to ensure that maximum run time can be achieved. This lithium-ion battery will not develop a memory and may be charged at any time.

1. Plug the charger into an AC power outlet.
2. Insert the battery pack into the charger.

This is a diagnostic charger. The Charger LED Lights will illuminate in specific order to communicate the current battery status. They are as follows:

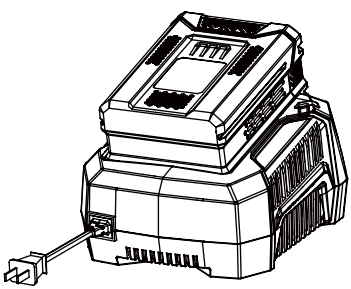

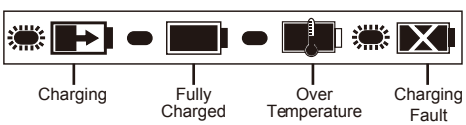

LED STATUS	DESCRIPTION
Blinking Green	Charging
Solid Green	Fully Charged
Solid Red	Over Temperature
Blinking Red	Charging Fault

False Defect Note: When the battery is inserted into the charger, and the status LED flashes, remove the battery from the charger for 1 minute, then reinsert. If the status LED indicates normal than the battery pack is good. If the status LED is still blinking, remove the battery pack and unplug the charger. Wait 1 minute and plug the charger back in and reinsert the battery pack. If the status LED indicates normal than the battery pack is good. If the status LED is still blinking then the battery pack is defective and needs to be replaced.

BATTERY & CHARGER MAINTENANCE

CHECKING THE CHARGE

If the battery pack does not charge properly:

- Check the current at the power outlet with another tool. Make sure that the outlet is not turned off.
- Check that the charger contacts have not been shorted by debris or foreign material.
- If the surrounding air temperature is not normal room temperature, move the charger and battery pack to a location where the temperature is between 45 ˚F and 104˚F .

⚠ W A R N I N G

If the battery is inserted into the charger when warm or hot, the CHARGING LED indicator light on the charger may switch on and illuminate RED. If this occurs allow the battery to cool outside of the charger from approximately 30 minutes. Charging should automatically start once battery has cooled.

CHARGER MOUNTING

1. This charger can be installed hanging on a wall using two #8 screws (not included).
2. Locate the placement for the charger to be wall mounted.
3. If fastening to wood studs use 2 wood screws (not included).
4. Drill two holes 4.5 in. apart ensuring that they are vertically aligned.
5. If fastening to drywall use wall anchors (not included) and screws to secure the charger to the wall.

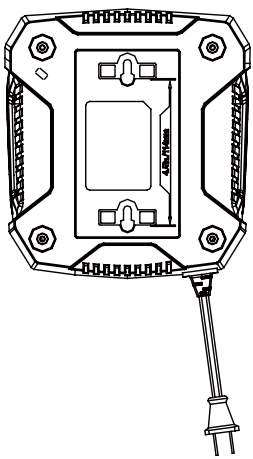

NOTE: If the battery and the charger won't be used for a long time, please remove the battery from the charger and pull out the AC power plug.

GENERAL MAINTENANCE

Avoid using solvents when cleaning plastic parts. Most plastics are susceptible to damage from various types of commercial solvents and may be damaged by their use. Use clean cloths to remove dirt, dust, lubricant, grease, etc.

Always store the machine clean and in a dry enclosure with the battery charged.

Maintenance task	**Each time the machine is used**	**Every two hours**	**Each week**	**After use**	**Every year or when required**
Visual check of the tool's safety systems (distancing device, carrying eye, safety casing)	X			X	
Check the trigger safety system functions	X				
Check the sharpness of blades and sharpen if necessary	X	X			X
Visual check of the tool (no cracks or deformation)	X	X			X
Visual check of the tool at the shaft attachment (no deformations or wear)	X	X			X
Check the battery level	X				
Inspection of the tool by an approved Greenworks dealer					X

ENVIRONMENTALLY SAFE BATTERY DISPOSAL

The following toxic and corrosive materials are in the batteries used in this string trimmer battery pack: **Lithium-Ion, a toxic material**.

⚠ W A R N I N G

All toxic materials must be disposed of in a specified manner to prevent contamination of the environment. Before disposing of damaged or worn out Lithium-Ion battery packs, contact your local waste disposal agency, or the local Environmental Protection Agency for information and specific instructions. Take the batteries to a local recycling and/or disposal centre, certified for lithium-ion disposal.

⚠ W A R N I N G

If the battery pack cracks or breaks, with or without leaks, do not recharge it and do not use. Dispose of it and replace with a new battery pack. DO NOT ATTEMPT TO REPAIR IT!
To avoid injury and risk of fire, explosion, or electric shock, and to avoid damage to the environment:

- Cover the battery's terminals with heavy-duty adhesive tape.
- DO NOT attempt to remove or destroy any of the battery pack components.
- DO NOT attempt to open the battery pack.
- If a leak develops, the released electrolytes are corrosive and toxic. DO NOT get the solution in the eyes or on skin, and do not swallow it.
- DO NOT place these batteries in your regular household trash.
- DO NOT incinerate.
- DO NOT place them where they will become part of any waste landfill or municipal solid waste stream.
- Take them to a certified recycling or disposal centre.

TROUBLESHOOTING

Problem	Cause	Solution
String trimmer fails to start when trigger lock button is depressed.	1. The battery pack is not attached to the trimmer.	1. Attach the battery pack to the trimmer.
	2. No electrical contact between the trimmer and battery.	2. Remove battery check contact and reinstall the battery pack.
	3. The battery pack is depleted.	3. Charge the battery pack.
	4. The lock-off lever and trigger are not depressed simultaneously.	4. Press down the lock-off lever and hold it, then depress the trigger to turn on the string trimmer.
	5. Did not press the power button, press the trigger directly.	5. Start the power button, the power indicator will trigger later.
String trimmer stops while cutting.	1. The guard is not mounted on the trimmer, resulting in an overly long cutting and motor overload.	1. Remove the battery pack and mount the guard on the trimmer.
	2. Heavy cutting line is used.	2. Use only with nylon cutting line 0.08" diameter or less.
	3. The motor shaft or trimmer head is bound with grass.	3. Stop the trimmer, remove the battery, and remove the grass from the motor shaft and trimmer head.
	4. The motor is overloaded.	4. Remove the trimmer head from the grass. the motor will recover to work as soon as the load is removed. when cutting, move the trimmer head in and out of the grass to be cut and remove no more than 8 inches of length in a single cut.
	5. The battery pack or string trimmer is too hot.	5. Allow the battery pack to cool until the temperature drops below 158°F (70°C). Allow the trimmer to cool until the temperature drops below 284°F (140°C).
	6. The battery pack is disconnected from the tool.	6. Re-install the battery pack.
	7. The battery pack is depleted.	7. Charge the battery pack.

TROUBLESHOOTING

Problem	Cause	Solution
Lines will not advance.	1. Lines are welded to themselves.	1. Lubricate with silicone spray.
	2. Not enough line on spool.	2. Install more line. Refer to Line Replacement earlier in this manual.
	3. Lines are worn too short.	3. Pull both lines while pressing button.
	4. Lines are tangled on spool.	4. Remove lines from spool and rewind. Refer to Line Replacement earlier in this manual.
Line keeps breaking.	1. Trimmer used incorrectly.	1. Only trim with the tip of the line, avoid stones, walls and other hard objects. Feed the line regularly to maintain full cutting width.
Grass wraps around trimmer head and motor housing.	1. Cutting tall grass at ground level	1. Cut tall grass from the top down, removing no more than 8 inches in each pass to prevent wrapping.
Line is not cutting well	1. The line-cutting blade on the edge of the guard has become dull.	1. Sharpen the line-cutting blade with a file or replace it with a new blade.

LIMITED WARRANTY

GREENWORKS™ hereby warranties this product, to the original purchaser with **proof of purchase**, 4 year warranty against defects in materials, parts or workmanship. GREENWORKS™, at its own discretion will repair or replace any and all parts found to be defective, through normal use, free of charge to the customer. This warranty is valid only for units which have been used for personal use that have not been hired or rented for industrial/ commercial use, and that have been maintained in accordance with the instructions in the owners' manual supplied with the product from new.

ITEMS NOT COVERED BY WARRANTY:

1. Any part that has become inoperative due to misuse, abuse, neglect, accident, improper maintenance, or alteration; or
2. The unit, if it has not been operated and/or maintained in accordance with the owner's manual; or
3. Normal wear, except as noted below;
4. Routine maintenance items such as lubricants, blade sharpening;
5. Normal deterioration of the exterior finish due to use or exposure.

GREENWORKS HELPLINE (1-855-345-3934):

Warranty service is available by calling our toll-free helpline at **(1-855-345-3934)**.

TRANSPORTATION CHARGES:

Transportation charges for the movement of any power equipment unit or attachment are the responsibility of the purchaser. It is the purchaser's responsibility to pay transportation charges for any part submitted for replacement under this warranty unless such return is requested in writing by **GREENWORKS**.

EXPLODED VIEW

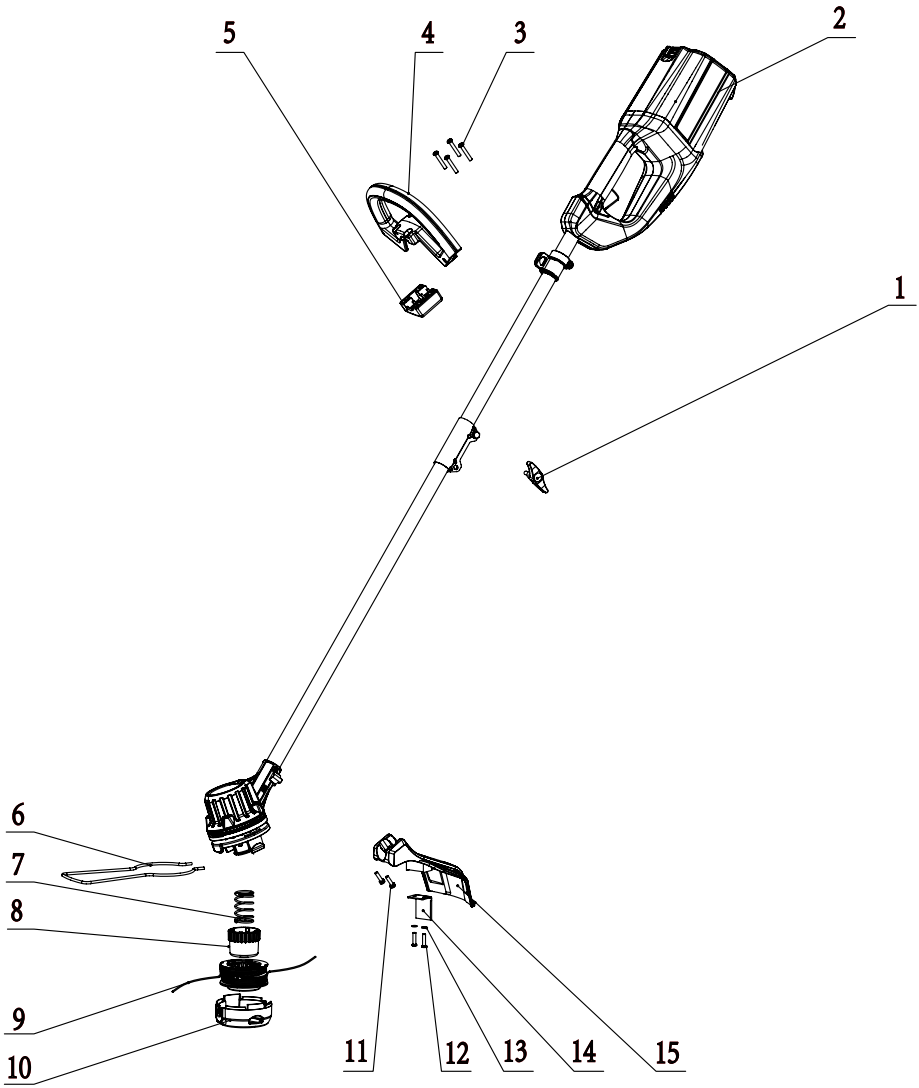

PARTS LIST

Item No.	Part No.	Description	QTY
1	34107511-10	Knob	1
2	311121416	Bare tool assembly	1
3	33208334	Screw	4
4	34130334	Auxiliary handle	1
5	34140334	Plate	1
6	333041429	Edge guide	1
7	332041428	Spring	1
8	341041429AB	Bump head	1
9	311101429	Spool	1
10	311091429	Spool cover	1
11	322011429	Washer	2
12	32207319	Screw	2
13	32916131	Spring washer	2
14	333011429	Cut-off blade	1
15	341081429AB	Guard	1

Greenworks Tools
P.O. Box 3130
Mooresville, North Carolina 28117

TOLL-FREE HELPLINE: 1-855-345-3934

Rev: 00 (11-25-15)

Printed in China on 100% Recycled Paper