PLEASE READ AND SAVE THESE INSTRUCTIONS

XPOWER®

PET DRYER + HEATER

OWNER'S MANUAL

MODEL: B-8 (115V/60Hz)

Nozzles included

XPOWER MANUFACTURE, INC.
220 Clary Avenue
San Gabriel, CA 91776, USA
Tel: 626-285-3301 Fax: 626-285-3302
www.xpower.ws

C ETL LISTED US
Intertek
Pending

TABLE OF CONTENTS

Introduction 1

Operation 2

Specifications 2

Important Safety Instructions 3

Grounding Instructions 4

Parts List 5

Maintenance 6

Warranty / Service 7

Warranty Registration Form 9

INTRODUCTION

Thank you for purchasing an XPOWER B-8 professional force dryer. Featuring advanced BRUSHLESS technology, the B-8 will outlast standard brush motor dryers with its 7,000+ hour motor. Enjoy full control when drying or styling with variable heat and speed controls. Add a stand and stationary styling arm (sold separately) for convenient hands-free drying.

Special Features:

- 4 HP BRUSHLESS DC Motor
- Powerful and Energy-Efficient
- Super Lightweight and Compact
- Remarkably QUIET Motor
- 8' x 1.7" Flexible Heat Protected PU Hose
- Thermally Protected
- Variable Heat and Speed Control Switches
- Durable & Rugged ABS Housing
- 1 Year Limited Warranty
- 3 Nozzle Attachments (included)

OPERATION

1. Place the dryer on a flat surface. Plug the electrical cord into a 3-prong GFCI outlet.
2. Connect the hose to the front hose connector and attach the desired nozzle.
3. Turn variable speed switch to desired speed.
4. To use heating element, choose desired heat setting or leave on off setting.
5. To reduce the risk of injury, close supervision is necessary when the unit is used near children.
6. Do not allow children to play with or around the unit.

SPECIFICATIONS

Model	**B-8**	**Unit Weight**	12.3lbs
Volts/Cycle	115V/60Hz	**Unit Dimensions**	17.2"x6.3"x9.8"
Power	4 HP	**Cord Length**	10'
Motor	BRUSHLESS DC	**Filter System**	✓
Max AMP	12A	**Styling Nozzles**	3
Rated Airflow	150CFM	**Housing**	ABS
Speeds	Variable	**Thermal Protection**	✓
Heating Element	Variable	**Safety Certification**	ETL/CETL (pending)

SAFETY INSTRUCTIONS

WARNING: IMPORTANT SAFETY PRECAUTIONS!
When using electrical appliances, especially when children or animals are present, basic safety precautions should always be followed to reduce the risk of fire, electric shock, and personal injury, including, but not limited to the following:

- Do not leave the dryer and animal unattended while the product is in use.
- Unplug dryer when not in use.
- Do not use extension cords with the product.
- Do not unplug unit by pulling on cord.
- Do not expose dryer to rain or water.
- Unplug unit before attempting any maintenance or service.
- Do not let air-intake get clogged.
- Do not direct dryer air towards eyes or ears of people or pets.
- Never use dryer with a damaged cord/plug or when unit has been dropped, damaged, or exposed to rain/water. Please call our Technical Department for service or repair.
- Do not use any other nozzles not intended for use with the dryer.
- Do not operate without filter in place. Keep filter clean, as a dirty filter limits air intake and may damage the motor or cause overheating.
- Plug only into a properly grounded receptacle. Always confirm that the amperage rating of the electrical outlet complies with the Dryer rating.
- Do not use product for anything other than its intended purpose.
- Do not attempt to perform any service or maintenance not outlined in the instruction manual.

SAVE THESE INSTRUCTIONS

HOUSEHOLD and COMMERCIAL USE

GROUNDING INSTRUCTIONS

This appliance must be grounded. In the event of malfunction or breakdown, grounding provides a path of least resistance for electric current to reduce the risk of electric shock. This appliance is equipped with a cord having an equipment-grounding conductor and a grounding plug. The plug must be plugged into an appropriate outlet that is properly installed and grounded in accordance with all local codes and ordinances.

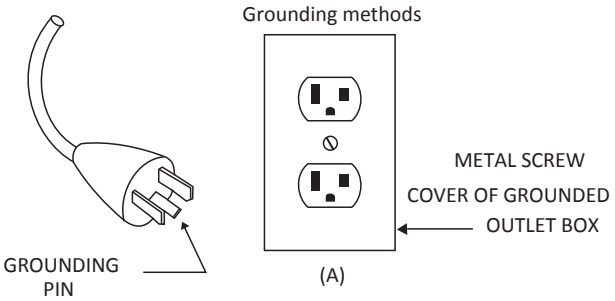

This appliance is for use on a nominal 115V circuit, and has a grounding plug that looks like the plug illustrated in sketch A. Make sure that the appliance is connected to an outlet having the same configuration as the plug. No adaptor should be used with this appliance.

PARTS LIST

1	Left housing	9	Motor	17	Rear cover baffle
2	Right housing	10	Dustproof cover	18	Inlet filter
3	Switch	11	Motor filter	19	Hose
4	Rubber feet	12	Dust case	20	Round groomer rake
5	Air outlet grid	13	Dust case filter	21	Flat nozzle
6	Heater element round cover	14	Rear cover	22	Cone nozzle
7	Heater element	15	Rear cover connector		
8	Motor rubber sleeve	16	Crossed cover		

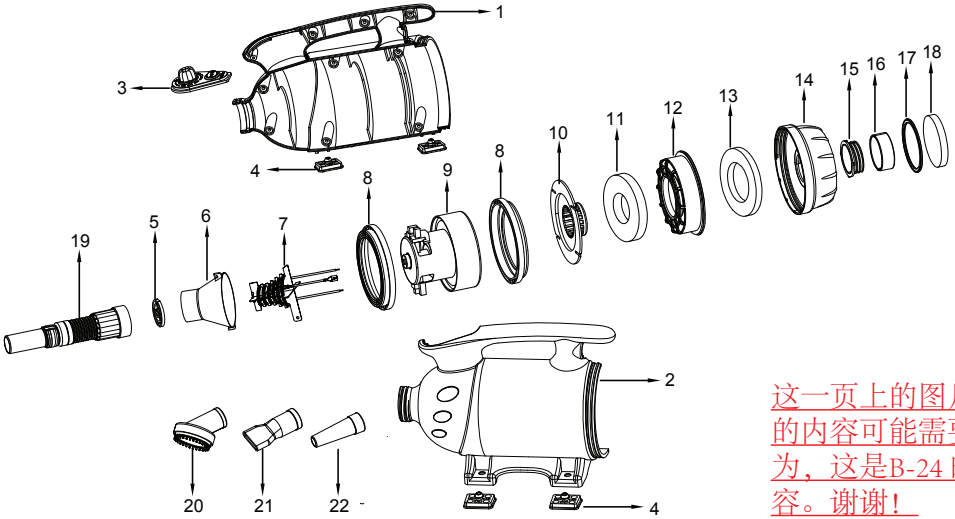

这一页上的图片和表格中的内容可能需要调整。因为，这是B-24 的图片和内容。谢谢！

MAINTENANCE

IMPORTANT!
Always turn off the unit and disconnect from electrical outlet before maintenabce or cleaning.

Product Maintenance:
1. To keep the Pet Dryer, use a damp cloth to wipe the surface of the housing. Removable part(s) and filters may be cleaned with water and dried thoroughly before reassembling.
2. When not in use, unplug and store the Pet Dryer in a dry place indoors and keep out of reach of children.

Cleaning Filters and Rear Cover:
The B-8 Pet Dryer has two washable filters - Inlet Filter and Motor Filter. The Inter filter is located on one side of dryer (rather than the side with hose). Open the rear cover to find motor filter. Both filters should be kept clean regularly. If the filters are coated with too much hair or dirt, the air output of the Dryer will be reduced, and this may cause damage to the motors or cause the motors to overheat. You should never operate the dryer without filters in place.

XPOWER LIMITED WARRANTY (USA)

XPOWER's Limited Warranty covers the unit (excludes POWER CORD) from defects in material and craftsmanship. The Warranty covers normal use for a term of one year from the original date of purchase including parts, labor, and one way shipping. Non-contiguous states must pay for roundtrip freight. A purchase receipt must be provided.

Important!
This warranty does not cover or apply to defects due directly or indirectly to misuse, abuse, disassembly, alteration, corrosive chemicals, improper voltage, fire, flood, negligence, accident, improperly or incorrectly performed maintenance or repair, or failure to perform necessary maintenance or repair, or if the use of this product is not in compliance with the instructions and specifications for its use

SERVICE

For Warranty service and parts replacement (US customer only), you must:

A. Call 1-855-855-8868 for a RMA (Return-Merchandise-Authorization) number.
B. Have original proof of purchase.
C. Use the original undamaged packaging or an industrial certified packaging method.

End user will be responsible for shipping the unit (with RMA Number showing on the shipping label) to the XPOWER Service Department. XPOWER will inspect, assess and advise the repairs needed and the applicable cost, if any.

For users outside the US, please contact an XPOWER Distributor in your country or region for Warranty service and parts replacement.

XPOWER PET PRODUCTS FOR PROFESSIONAL GROOMING INDUSTRY

Force Dryers

B-3 (2 HP / 8 Amps / 100 CFM) - with vacuuming feature
B-4 (3 HP / 10 Amps / 120 CFM) -with vacuuming feature
B-5 (4 HP / 12 Amps / 140 CFM) -with vacuuming feature
B-8 (4 HP / 12 Amps / 150 CFM) - brushless DC motor with heater
B-24 (3 HP / 12 Amps / 150 CFM) - with heater
B-25 (4 HP / 12 Amps / 160 CFM) - double motor
B-27 (6 HP / 19 Amps / 180 CFM) - double motor

Stand Dryers

B-16 (1/4 HP / 12 Amps / 300 CFM)
B-18 (1/3 HP / 18 Amps / 380 CFM)

Cage Dryers

X-430TF w/ 430MDK (1/3 HP / 3.8 Amps / 2000 CFM)
X-800TF w/ 800MDK (3/4 HP / 7.5 Amps / 3200 CFM)

Air Purification:

X-3300 / X-3500 - Air Scrubbers
APDS-1 - Air Purification & Drying System

Warranty Registration (for US customer only)

For your product warranty, please complete and mail / fax this form to XPOWER MANUFACTURE, INC.
Address: 220 Clary Ave., San Gabriel, CA 91776. Tel: 626-285-3301 Fax: 626-285-3302

(For your convenience, register your product online at xpower.ws)

Company Name / Contact Person / Title _____

Address _____ City _____

State / Province _____ Zip _____ Country _____

Phone _____ Fax _____ E-mail _____

Model # _____ **Serial #:** _____

Date of Purchase _____/_____/_____ **Purchased From** _____

Additional Comments / Suggestions _____

From: _____

_____

_____

TO:

XPOWER MANUFACTURE, INC.

220 Clary Avenue

San Gabriel, CA 91776, USA

Tel: 626-285-3301, Fax: 626-285-3302

XPOWER®