AC POWERED

DC POWERED

S POWERED

USER'S MANUAL

For Electric Fence Energizers, Chargers, Controllers, Fencers manufactured by Woodstream Corporation

SAVE THESE INSTRUCTIONS

IMPORTANT INFORMATION

FOR OPTIMAL RESULTS, WE RECOMMEND YOU HAVE THE FOLLOWING:

1. Electric Fence Tester
2. Three 6-8' Ground Rods
3. Battery Tester (For DC and Solar)
4. Three Ground Rod Clamps
5. 2 Two Lengths 20 KV Insulated Hook-up Wire (one long enough to connect to fence energizer to ground system and one long enough to fence energizer to fence line)

WARNING: THE FOLLOWING CAN RESULT IN DECREASED FENCE PERFORMANCE

1. Brush, weed and plant growth around the base of your fence.
2. Improper grounding.
3. Snow.
4. Cracked or broken insulators.
5. Fence wires that are less than 4" apart.
6. Dry, rocky or sandy soils.
7. Insufficiently charged battery.

Learn more about fencing by visiting our websites at:

zarebasystems.com
blitzerfencing.com
AmericanFarmworks.com
fishock.com

BEEFORE YOU START

▲WARNING: Read ALL these instructions. Only use electric fence energizer products for the purpose intended as defined in this manual.

▲This controller must be grounded. If it should malfunction or break down, grounding reduces the risk of electrical shock by providing a path of low resistance for the electric current. Grounding this product is provided by properly installed ground rod electrically connected to the fence controller output ground terminal.

▲To reduce the risk of electric shock, an AC line operated fence controller has an polarized plug (one blade wider than the other). This plug will fit in a polarized outlet only one way. If the plug does not fit fully in the outlet, reverse the plug. If it still does not fit, contact a qualified electrician to install the proper outlet. Do not change the plug in any way.

▲To reduce risk of electrical shock do not remove cover. Refer to service personnel.

▲Never electrify barbed wire! The barbs may injure animals if they become tangled in the fence.

▲Always disconnect battery-powered fence controllers from the battery before recharging the battery. Failure to do so may damage your fence controller and battery charger, and void your warranty.

▲Never run more than on fence controller on the same fence line at one time. The pulses of short shock solid state fence controllers will be too close together and may be hazardous to animals and people. It will also damage your fence controllers.

▲Instruct all persons how to disconnect a fence controller in case of emergency. Post signs on electric fences along public roads or near residences.

▲Never disconnect wires or approach a fence during lightning storms.

▲WARNING: Risk of electric shock! Do not connect an eletric fence to any other device such as a cattle trainer or a poultry trainer. Otherwise lightning striking your fence will be conducted to all other devices.

▲Never connect a DC fence to an AC power supply.

▲WARNING: Energizers requiring an external ground must be properly grounded.

▲WARNING: Many AC energizers are internally grounded and are equipped with polarized 2 prong plugs. These plugs must never be altered and must be inserted into a properly installed, appropriate outlet. Only use a polarized extension cord. Damaged polarized plugs must be replaced with polarized plugs. failure to follow this warning could create a safety hazard, damage the energizer, and void the warranty.

▲Install fence lines powered by seperate fence energizers far enough apart to prevent contact with both fence lines at the same time. Simultaneously touching two fences powered by seperate energizers could be hazardous.

▲Install fence lines powered by seperate fence energizers far enough apart to prevent contact with both fence lines at the same time. Simultaneously touching two fences powered by seperate energizers could be hazardous.

▲In a double-insulated energizer, two systems of insulation are provided instead of grounding. No means of equipment ground is provided in the supply cord of a double-insulated energizer, nor should a means for equipment grounding be added to the energizer. Servicing of a double-insulated energizer requires extreme care and knowledge of the system, and should be done only by a serive personnel. Replacement parts for a double-insulated energizer must be identical to the parts they replace.

FENCE ENERGIZER INSTALLATION

Overview of Installed Fence Energizer

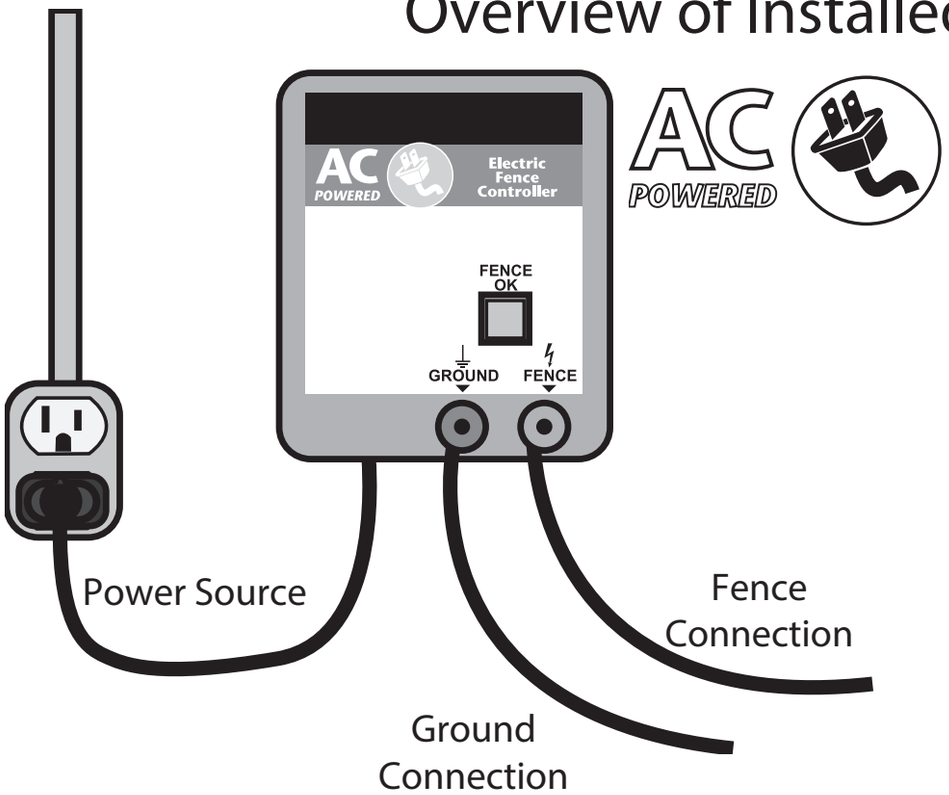

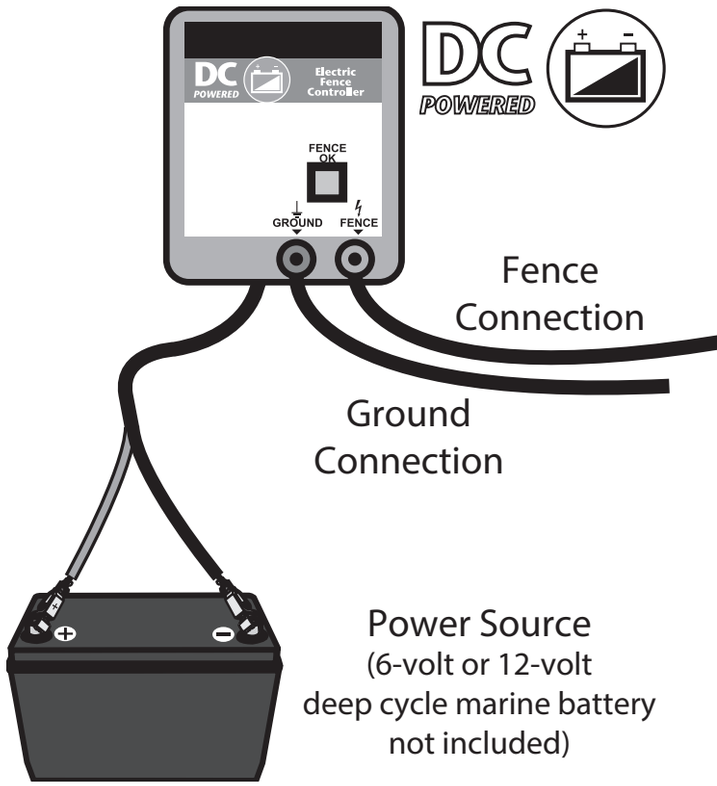

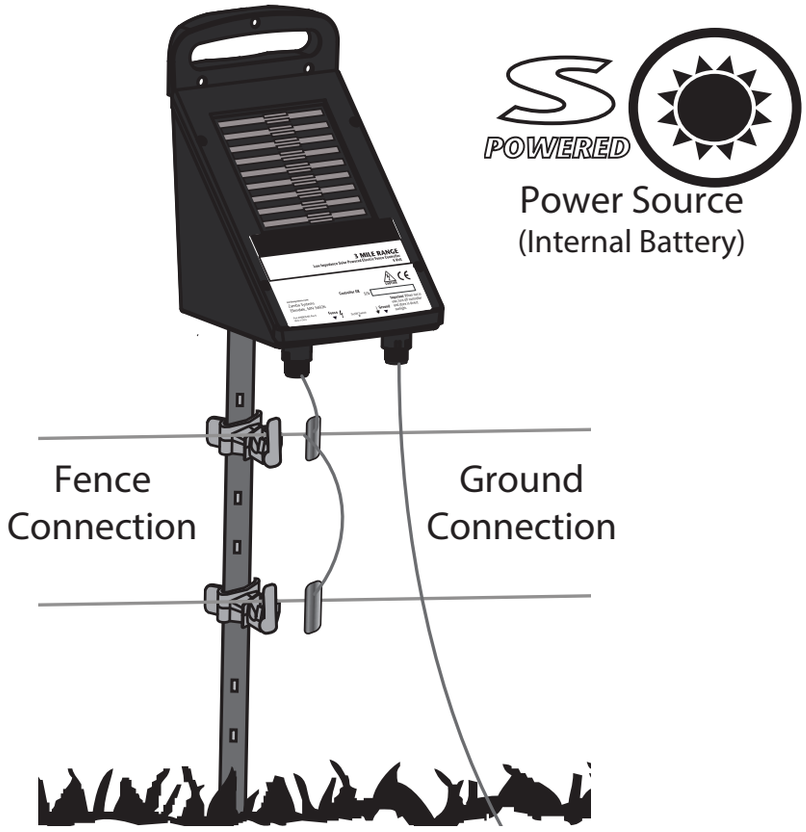

STEP 1: Mount Fence Energizer

IMPORTANT: Mount inside or in a waterproof enclosure (Required for AC Energizers)

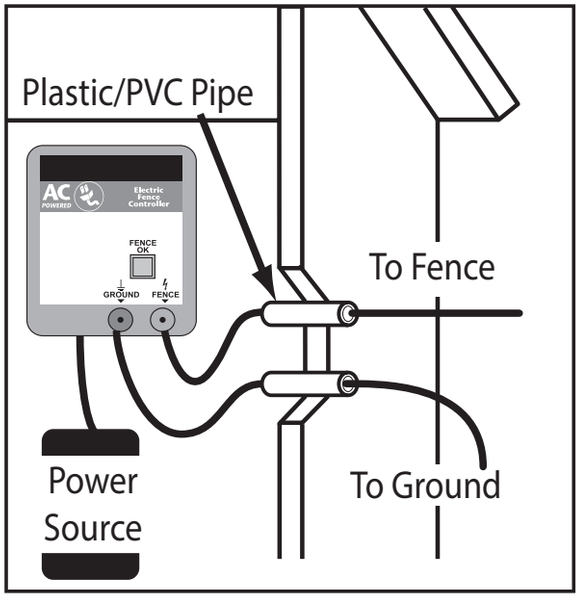

AC/DC Inside installation

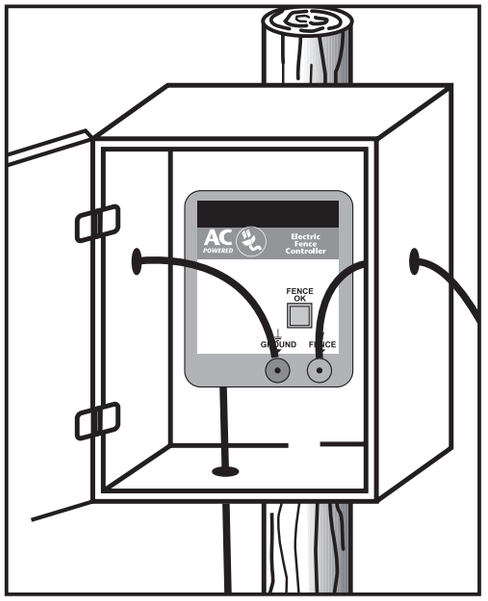

AC Outdoor
Sheltered Installation

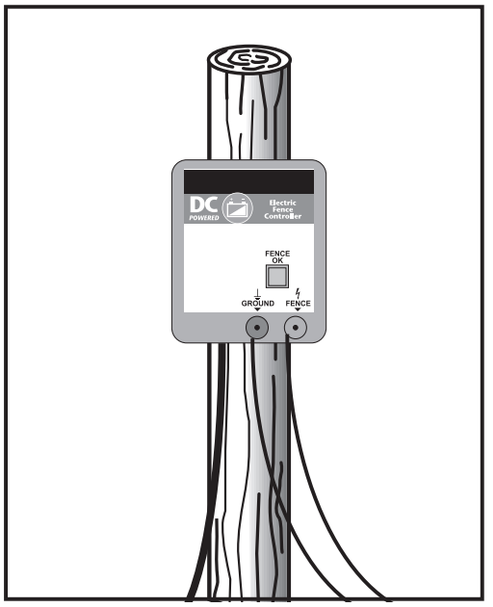

DC Outside
Installation

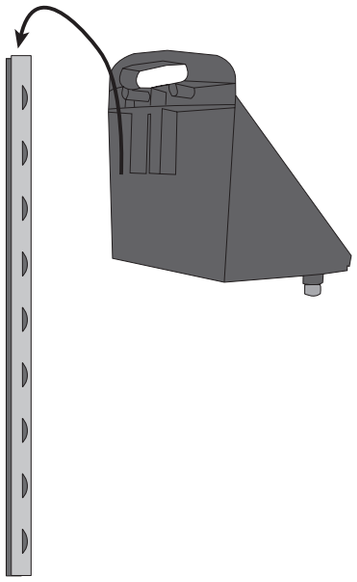

Solar T-Post Installation
(applicable for specific models)

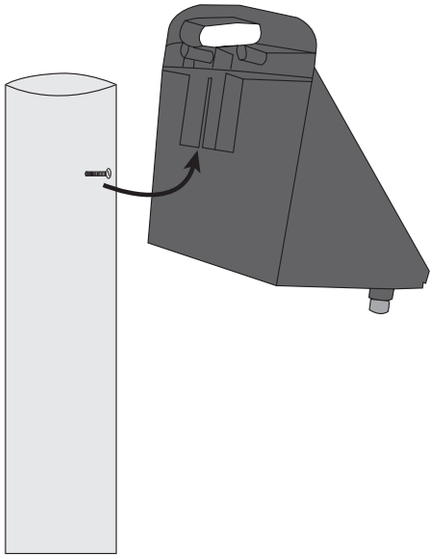

Solar Wood Post Installation
(applicable for specific models)

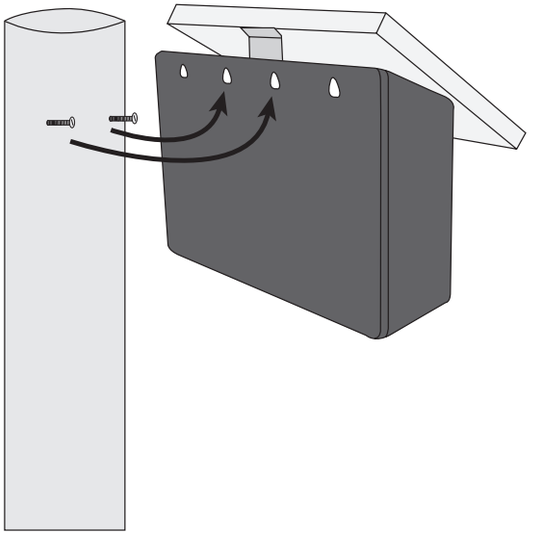

Solar Wood Post Installation

STEP 2: Connect Ground and Fence Terminals

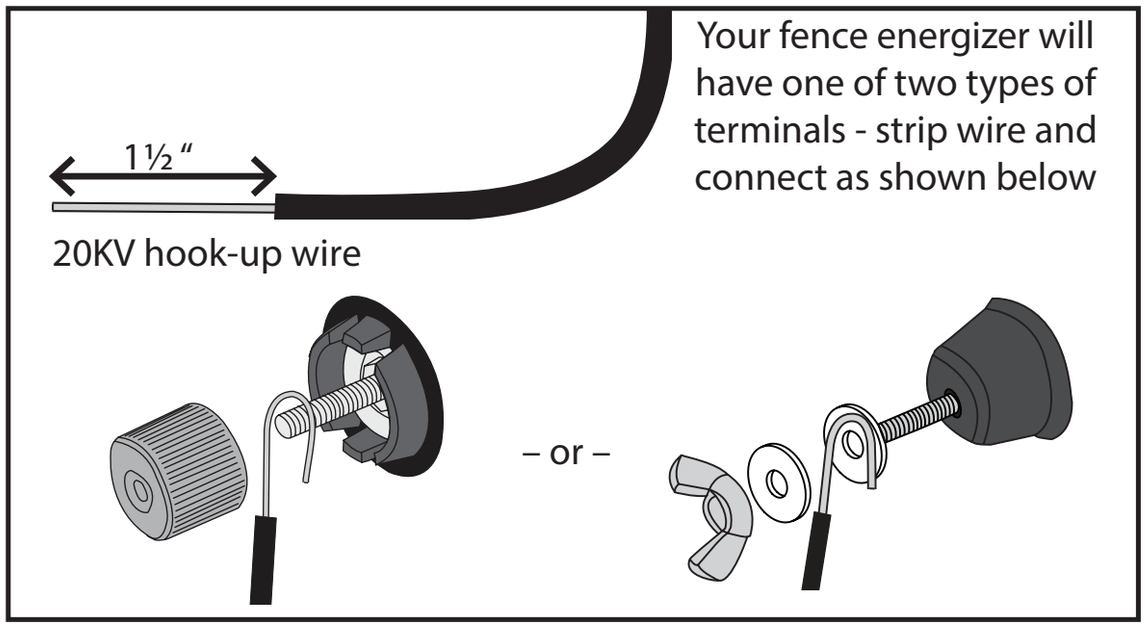

Your fence energizer will have one of two types of terminals - strip wire and connect as shown below

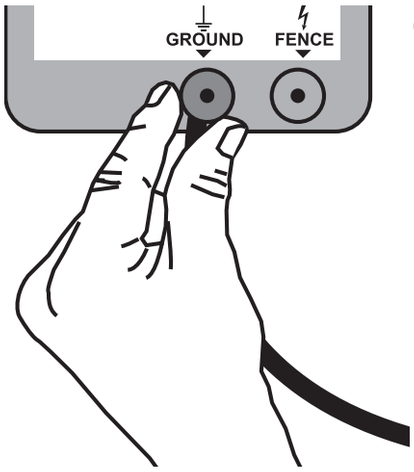

Connect hook-up wire to GROUND terminal

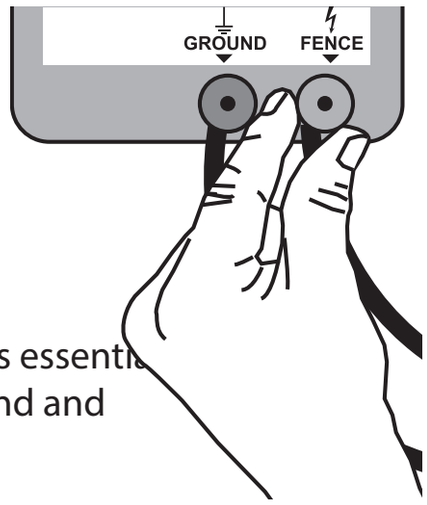

Connect hook-up wire to FENCE terminal

Note: Wire to metal contact is essenti when hooking up your ground and fence terminal.

STEP 3: Connect to Ground System

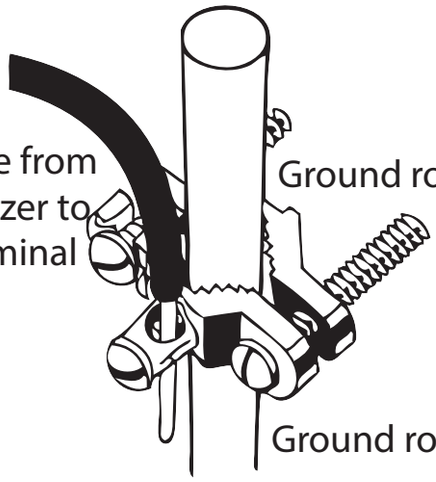

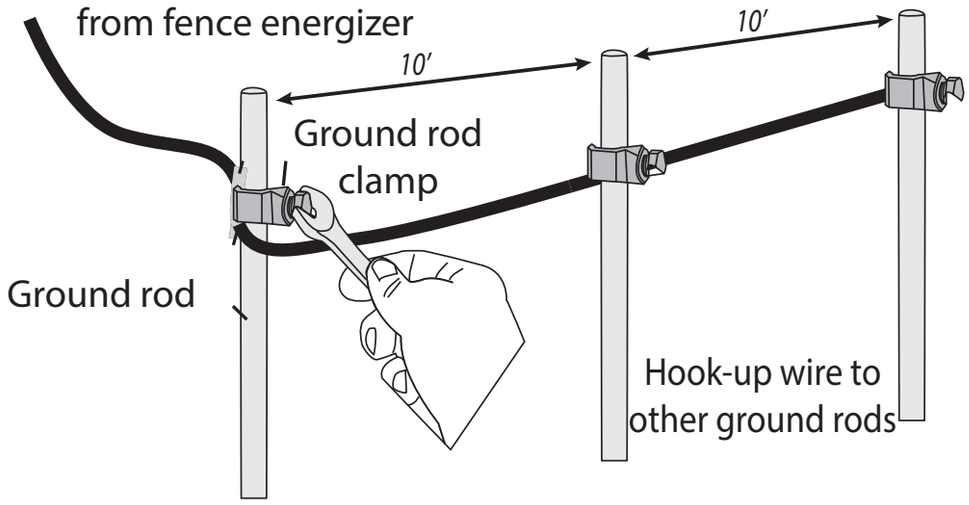

STEP 4: Connect to Fence Line

Aluminum/Steel/Poly wire connection

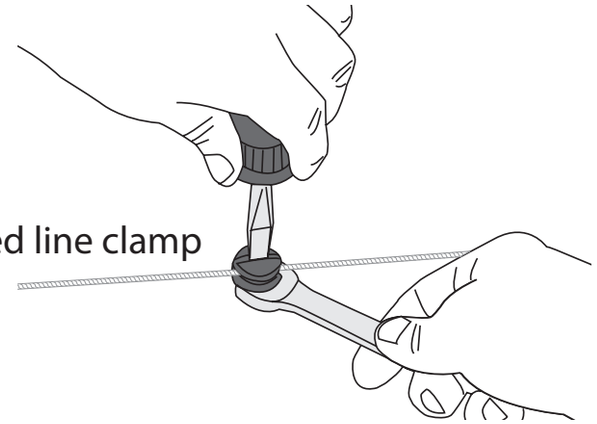

Galvanized line clamp

Poly tape connection

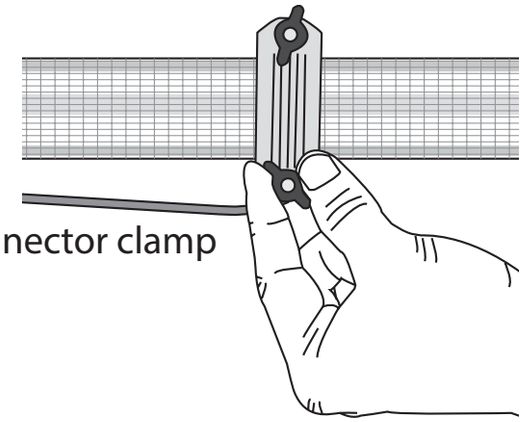

Poly tape connector clamp

STEP 5: Power Fence Energizer

NOTE: Fence energizer will be outputting voltage at this point - to avoid shock do not touch fence terminal or fence wire.

* For AC energizers, power fence by plugging power cord into 110V outlet.

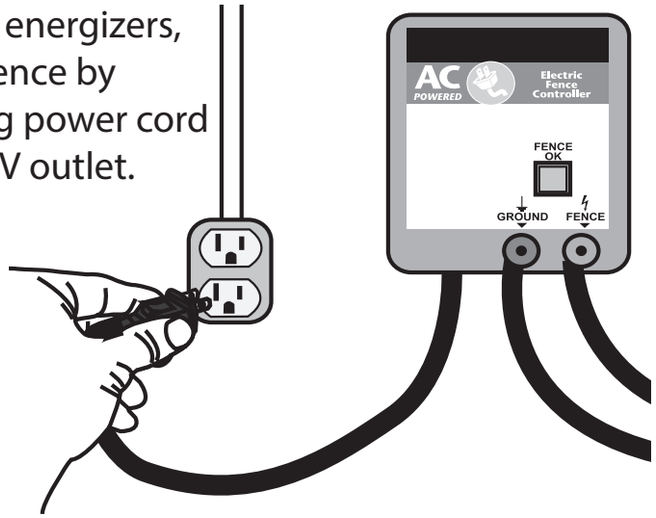

* For DC energizers, power fence by connecting alligator clips to a 6 or 12-volt rechargeable deep cycle marine battery.

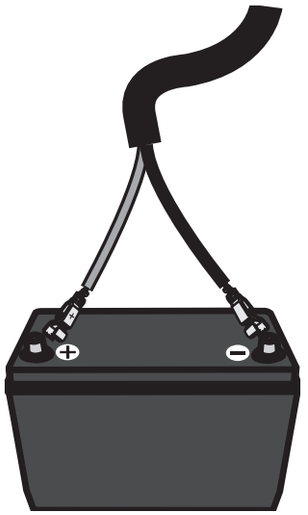

* For Solar energizers, power fence by turning on/off switch to the ON position.

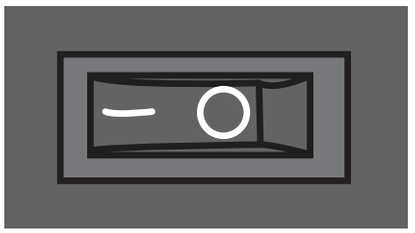

IMPORTANT: Solar energizers must be placed in the sun and turned off for three days before use in order to ensure the battery has a sufficient charge to power your fence. Failure to charge for three days could result in decreased performance.

ELECTRIC FENCING BASICS AND TESTING

How Electric Fencing Works

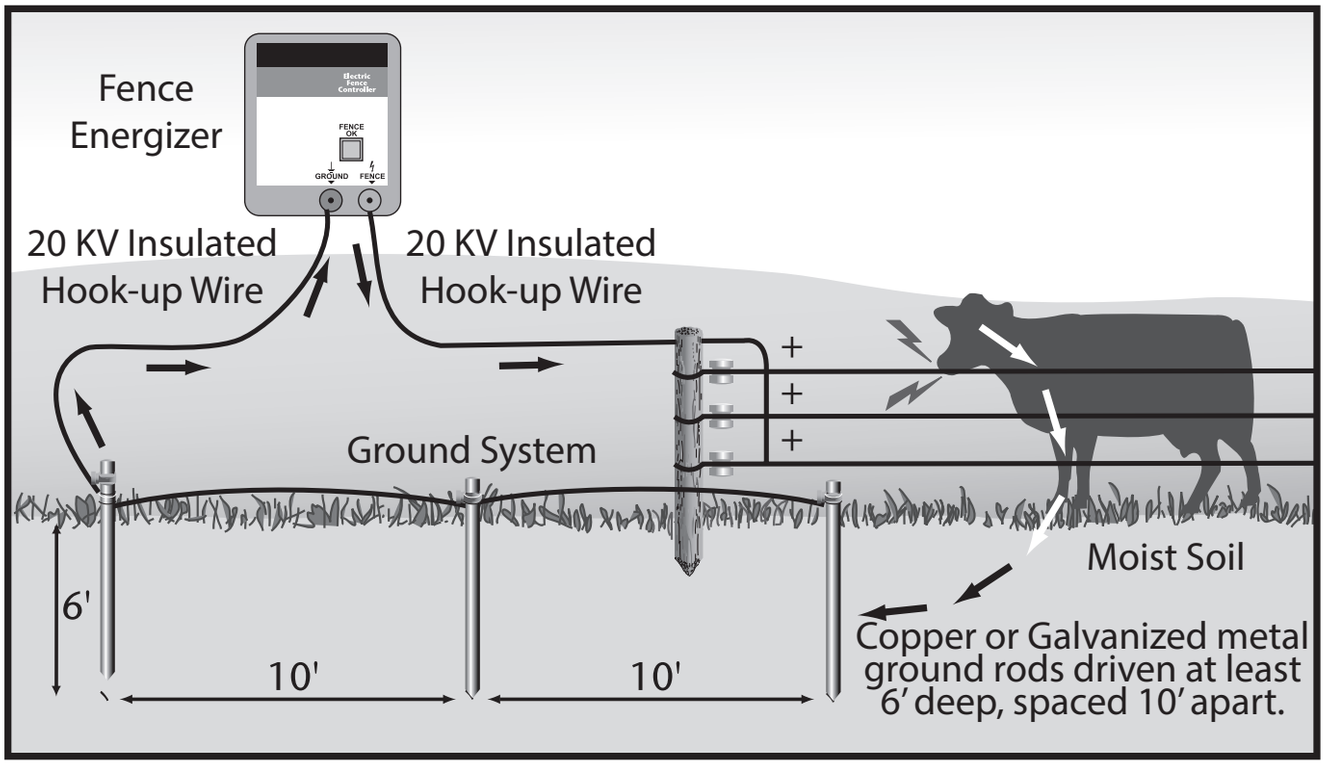

The system works when an animal provides an electrical path by touching the fence wire and the earth simultaneously. The electricity then passes through the animal, into the soil and back to the ground rods, which are connected to the fence energizer. At that point the circuit is complete and the animal instantly receives an eletrical shock.

Testing Ground System

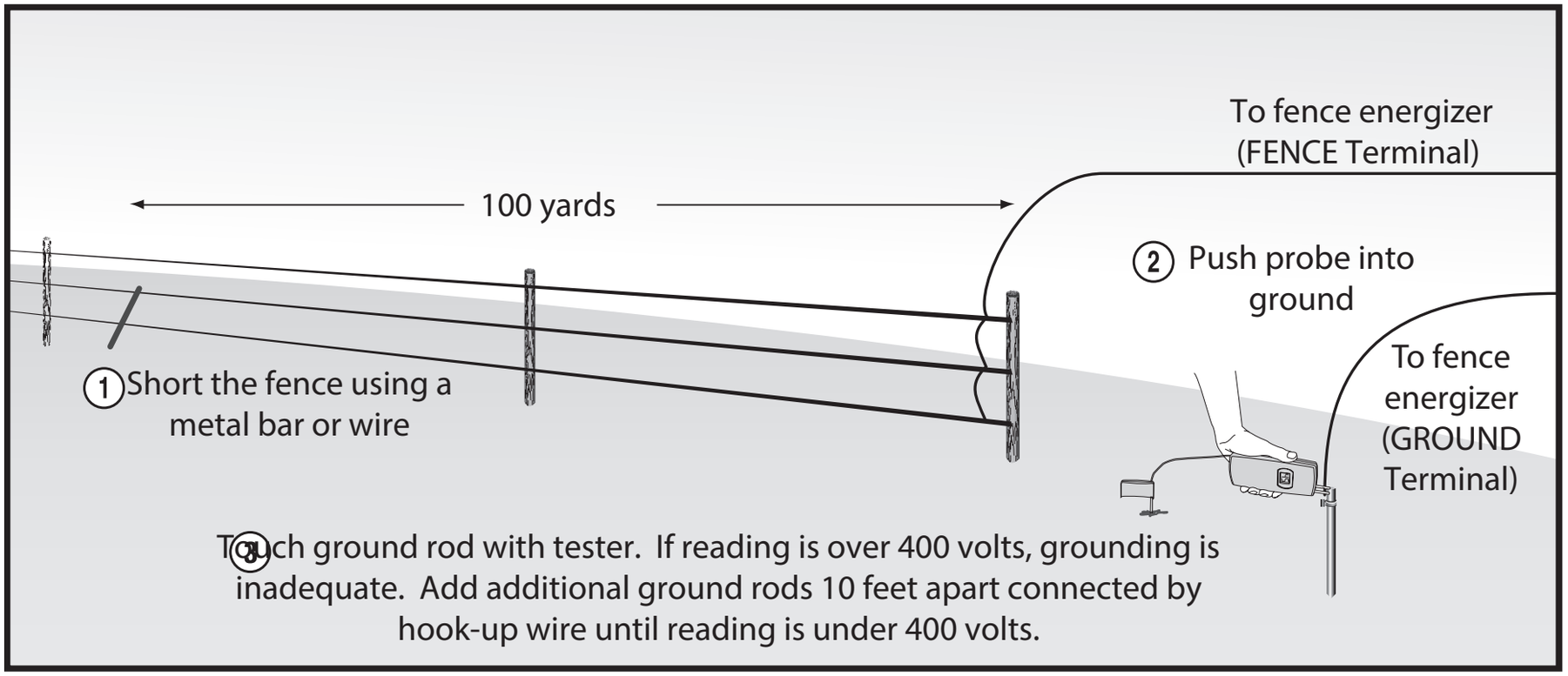

Testing Hook-up Wire

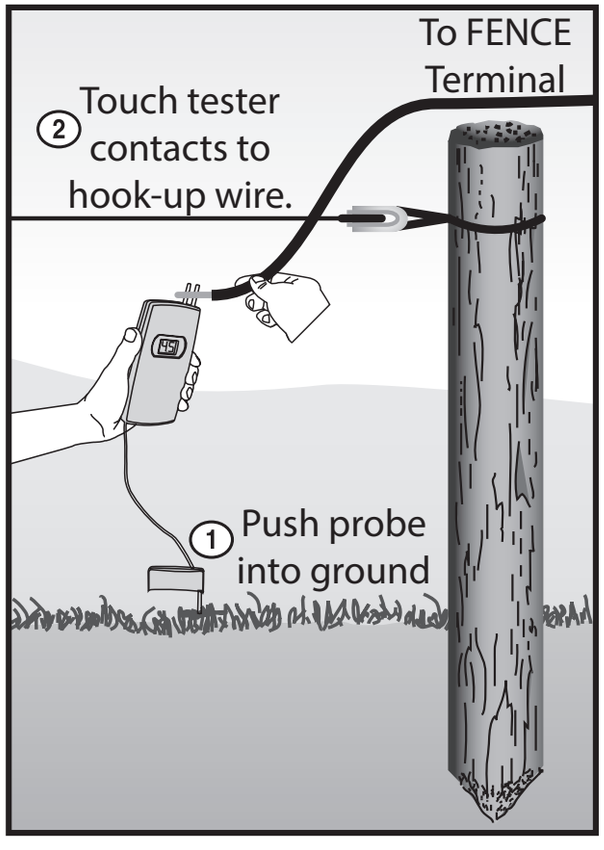

To test the hook-up wire, remove fence energizer power source (unplug or disconnect from battery) and disconnect the hook-up wire from the fence line. Power fence energizer and then check hook-up wire as shown.

Testing Fence Line

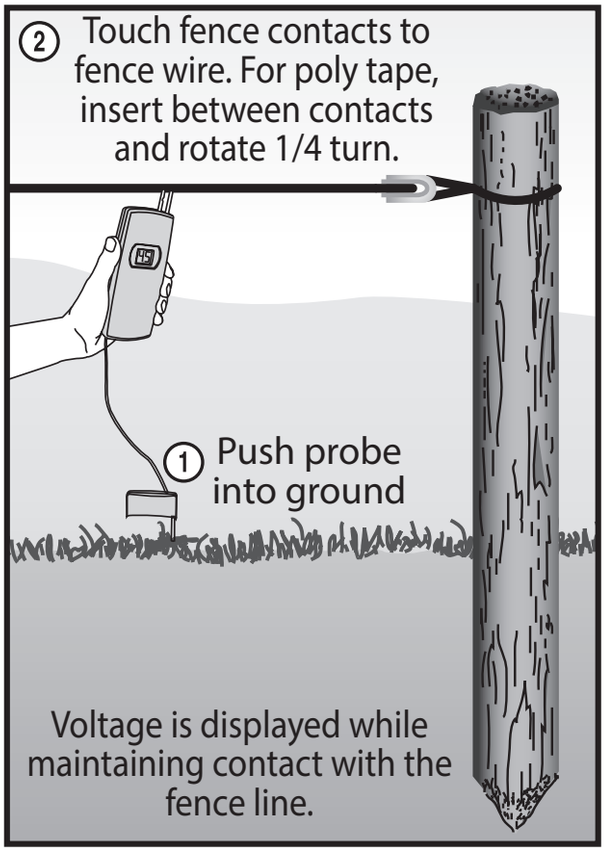

Testing Fence Energizer

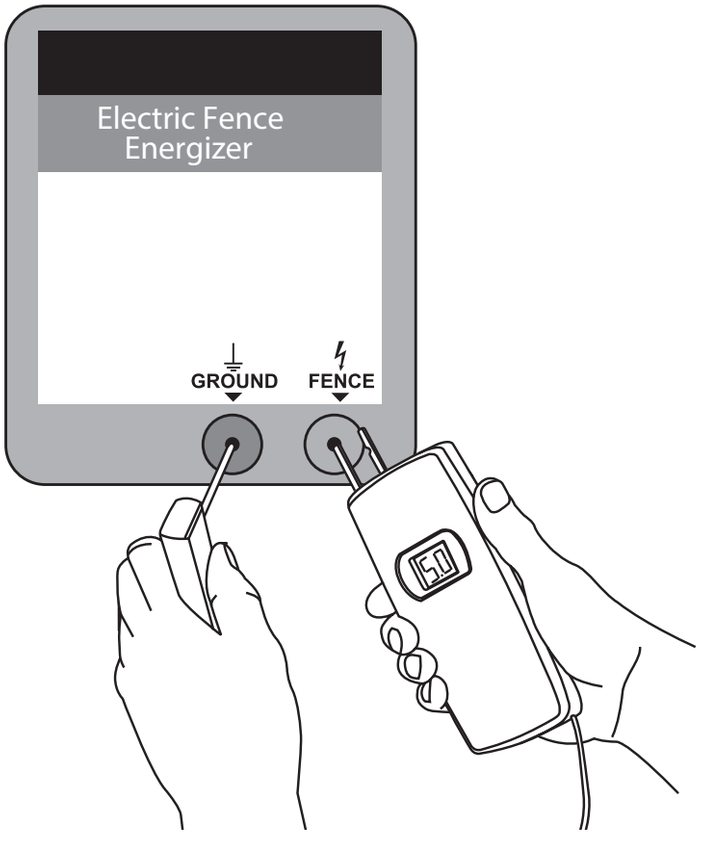

Remove fence energizer power source (unplug or disconnect from battery) and disconnect the fence and ground wires. Reconnect the energizer to its power source and touch metal bolts of the ground and fence terminals with ground and fence prong from a tester.

If output is less than 2,000 volts, there may be a fence energizer problem call us at 855-592-7322

Fence Energizer Warranty

30-DAY FULL WARRANTY

Woodstream gaurantees your satisfaction. You can return product with it receipt to the place of purchase within 30 days for a full refund. Proof of purchase is required for a full refund.

LIMITED WARRANTY

Woodstream warrants energizers based on their milage rating from the date of purchase (or date of manufacture if proof of purchase is not provided) against defects in materials and workmanship, and from damage caused by lightning. Visit our website at www. zarebasystems.com to learn more about the warranty that applies to the specific energizer purchased.

For any sized energizer, retain your receipt for proof of purchase or register your energizer online at www.zarebasystems.com immediately after purchase. Also, please reference the web page for a list of Certified Repair Centers and instructions on returning fence controllers for service.

TERMS APPLICABLE TO BOTH 30-DAY RETURN POLICY AND THE LIMITED WARRANTY. Neither the 30-day return policy nor the limited warranty applies to any defect caused by improper installation, misuse, product alterations, tampering, neglect or any similar reason not related to product malfunctions or defects in the materials or workmanship of the product. The 30-day return policy and the limited warranties are given only to the original purchaser of the product and not to any subsequent owners or to any other user or person when installed and used in accordance with the instructions found in the owner's manual. No person is authorized to grant any warranty additional to or different from this written warranty.

To make a warranty claim, you must contact Woodstream Corp. at 800-800-1819 or zarebasystems.com regarding defective product or parts during the warranty period or contact one of the Certified Repair Centers listed on zarebasystems.com

If you have not registered your energizer online immediately after purchase, you may need to provide additional information such as, your name, mailing address, proof of purchase date and a description of the problem. If the defect is covered by the limited warranty, Woodstream Corp. or a repair center will repair or replace (at its option) the defective product or parts.

NEITHER THE SELLER NOR THE MANUFACTURE SHALL HAVE LIABILITY FOR ANY ACCIDENTIAL OR CONSEQUENTIAL DAMAGES RESULTING FROM OR CAUSED BY ANY DEFECT, FAILURE OR MALFUNCTION OF ANY PRODUCT.

WOODSTREAM™

SERIAL NUMBER INFORMATION

The serial number for all Woodstream Corp. fence energizers will go to a 12 digit serial number. The format for the 12 digit serial number is as follows:

EC	XX	XX	XX	XXXX
Category	**Year**	**Month**	**Day**	**Serial number**

If no sales receipt is provided with the return, we will use the date of manufacture shown in the serial number.

Please contact Woodstream Corp. for all warranty claims or returns:
Woodstream Corp.
69 North Locust Street
Lititz, PA 17543
855-592-7322

LIMITATION OF DAMAGES

The directions for use of this product should be followed carefully. It is impossible to eliminate all risk inherently associated with use of the product. The effectiveness of Woodstream brands of fence controllers may depend on the effectiveness of connections, interruption of power source, accidential grounding of wires, weather conditions or the manner of use or application, all of which are beyond the control of Woodstream or the seller. All such risks shall be assumed by the buyer.

Woodstream warrants that this product is reasonbly fit for the purposes referred to in the directions for use, subject to the inherent risks referred to above. Woodstream makes no other expressed or implied warranty of fitness or merchantability or any other expressed or implied warranty. IN NO CASE SHALL WOODSTREAM AND THE SELLER BE LIABLE FOR CONSEQUENTIAL, SPECIAL OR INDIRECT DAMAGES RESULTING FROM THE USE OR HANDLING OF THIS PRODUCT. WOODSTREAM AND THE SELLER OFFER THIS PRODUCT AND THE BUYER AND USER ACCEPT IT, SUBJECT TO THE FOREGOING CONDITIONS OF SALE AND WARRANTY WHICH MAY BE VARIED ONLY BY AGREEMENT IN WRITING SIGNED BY AN OFFICER OF WOODSTREAM.

Some states, however, do not allow the exclusion or limitation of incidental or consequential damages, so the above limitation or exclusion may not apply to you. This limited warranty gives you specific legal rights, and you may also have other rights which vary from state to state.