Dyna-Glo™

VENT-FREE INFRARED GAS WALL HEATER

MODEL #

Propane
IR6PTDG-1/PMDG-1
IR12PTDG-1/PMDG-1
IR18PTDG-1/PMDG-1
IR30PTDG-1/PMDG-1

Natural Gas
IR6NTDG-1/NMDG-1
IR12NTDG-1/NMDG-1
IR18NTDG-1/NMDG-1
IR30NTDG-1/NMDG-1

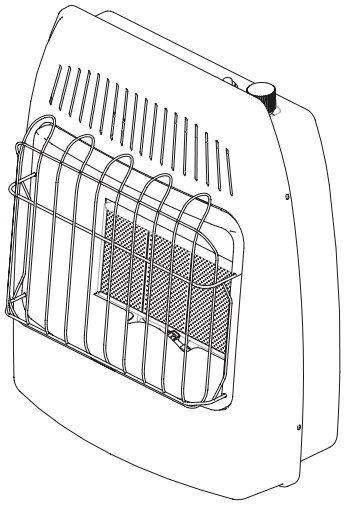

US
ANS Z21.11.2-2013
Gas Fired Room Heaters
Volume II - Unvented Room Heaters

WARNING: This appliance is equipped for (natural or propane) gas. Field conversion is not permitted.

WARNING: IF THE INFORMATION IN THIS MANUAL IS NOT FOLLOWED EXACTLY, A FIRE OR EXPLOSION MAY RESULT CAUSING PROPERTY DAMAGE, PERSONAL INJURY OR LOSS OF LIFE.

- Do not store or use gasoline or other flammable vapors and liquids in vicinity of this or any other appliance.

WHAT TO DO IF YOU SMELL GAS

- Do not try to light any appliance.
- Do not touch any electrical switch; do not use any phone in your building.
- Immediately call your gas supplier from a neighbor's phone. Follow the gas supplier's instructions.
- If you cannot reach your gas supplier, call the fire department.

- Installation and service must be performed by a qualified installer, service agency or the gas supplier.

This is an unvented gas-fired heater. It uses air (oxygen) from the room in which it is installed. Provisions for adequate combustion and ventilation air must be provided. Refer to Air For Combustion and Ventilation section on page 8 of this manual.

INSTALLER: Leave this manual with the appliance.
CONSUMER: Retain this manual for future reference.

This appliance may be installed in an aftermarket, permanently located, manufactured (mobile) home, where not prohibited by local codes.

This appliance is only for use with the type of gas indicated on the rating plate.
This appliance is not convertible for use with other gases.

Questions, problems, missing parts? Before returning to your retailer, call our customer service department at 1-877-447-4768, 8:30 a.m. – 4:30 p.m., CST, Monday – Friday or email us at customerservice@ghpgroupinc.com.

IMIR - 2016-04-18

TABLE OF CONTENTS

Important Safety Information 4
Product Features 6
Air For Combustion and Ventilation 8
Installation 11
Operation 18
Care and Maintenance 22
Troubleshooting 23
Replacement Parts 27
Warranty 28

⚠ WARNING: Read the Installation & Operating Instructions before using this appliance.

IMPORTANT: Read all instructions and warnings carefully before starting installation. Failure to follow these instructions may result in possible injury to persons or a fire hazard and will void the warranty.

PRODUCT SPECIFICATIONS

SERIES	IR6PTDG-1/PMDG-1	IR12PTDG-1/PMDG-1
MAX BTU	6,000	12,000
Fuel Type	Propane	Propane
Ignition	Electronic Push Button	Electronic Push Button
Manifold Pressure	10 in. W.C.	10 in. W.C.
Inlet Gas Pressure		
Maximum	14 in. W.C.	14 in. W.C.
***Minimum (*For purposes of input adjustment)**	11 in. W.C.	11 in. W.C.
Dimensions (in.) (H x W x D)	20.00 in. x 17.32 in. x 9.49 in.	20.00 in. x 17.32 in. x 9.49 in.
Fan Ratings (Select Models)	Not Available	120V/60Hz,18W, 0.15A

SERIES	IR18PTDG-1/PMDG-1	IR30PTDG-1/PMDG-1
MAX BTU	18,000	30,000
Fuel Type	Propane	Propane
Ignition	Electronic Push Button	Electronic Push Button
Manifold Pressure	10 in. W.C.	10 in. W.C.
Inlet Gas Pressure		
Maximum	14 in. W.C.	14 in. W.C.
***Minimum (*For purposes of input adjustment)**	11 in. W.C.	11 in. W.C.
Dimensions (in.) (H x W x D)	24.02 in. x 20.94 in. x 10.08 in.	24.09 in. x 28.07 in. x 10.51 in.
Fan Ratings (Select Models)	120V/60Hz,18W, 0.15A	120V/60Hz,18W, 0.15A

SERIES	IR6NTDG-1/NMDG-1	IR12NTDG-1/NMDG-1	
MAX BTU	6,000	12,000	
Fuel Type	Natural Gas	Natural Gas	
Ignition	Electronic Push Button	Electronic Push Button	
Manifold Pressure	5 in. W.C.	5" W.C. (IR12NTDG-1)	4" W.C. (IR12NMDG-1)
Inlet Gas Pressure			
Maximum	14 in. W.C.	14 in. W.C.	
***Minimum (*For purposes of input adjustment)**	6 in. W.C.	6 in. W.C.	
Dimensions (in.) (H x W x D)	20.00 in. x 17.32 in. x 9.49 in.	20.00 in. x 17.32 in. x 9.49 in.	
Fan Ratings (Select Models)	Not Available	120V/60Hz,18W, 0.15A	

SERIES	IR18NTDG-1/NMDG-1		IR30NTDG-1/NMDG-1	
MAX BTU	18,000		30,000	
Fuel Type	Natural Gas		Natural Gas	
Ignition	Electronic Push Button		Electronic Push Button	
Manifold Pressure	5" W.C. (IR18NTDG-1)	4" W.C. (IR18NMDG-1)	5" W.C. (IR30NTDG-1)	4.5" W.C. (IR30NMDG-1)
Inlet Gas Pressure				
Maximum	14 in. W.C.		14 in. W.C.	
***Minimum (*For purposes of input adjustment)**	6 in. W.C.		6 in. W.C.	
Dimensions (in.) (H x W x D)	24.02 in. x 20.94 in. x 10.08 in.		24.09 in. x 28.07 in. x 10.51 in.	
Fan Ratings (Select Models)	120V/60Hz,18W, 0.15A		120V/60Hz,18W, 0.15A	

IMPORTANT SAFETY INFORMATION

IMPORTANT: Read this owner's manual carefully and completely before trying to assemble, operate, or service this heater. Improper use of this heater can cause serious injury or death from burns, fire, explosion, electrical shock, and carbon monoxide poisoning.

Installation and repair should be done by a qualified service person. The appliance should be inspected before use and at least annually by a professional service person. More frequent cleaning may be required due to excessive lint from carpeting, bedding material, etc. It is imperative that control compartments, burners and circulating air passageways of the appliance be kept clean.

WARNING: Any change to this heater or its controls can be dangerous.

WARNING: Carefully supervise young children when they are in the room with the heater.

WARNING: Heater becomes very hot when operating. Children and adults should be alerted to the hazard of high surface temperatures and should stay away to avoid burns or clothing ignition Heater will remain hot for a time after shutoff. Allow surfaces to cool before touching.

WARNING: Make sure any panel, safety screen or guard removed for servicing an appliance is replaced prior to operating the heater

WARNING: Keep the appliance area clear and free from combustible materials, gasoline, and other flammable vapors and liquids.

WARNING: Do not place clothing or other flammable material on or near the appliance. Never place any objects on the heater.

WARNING: Due to high temperatures, locate this appliance out of traffic and away from furniture and draperies.

This appliance is intended for supplemental heating.

CARBON MONOXIDE POISONING: Early signs of carbon monoxide poisoning resemble the flu with headaches, dizziness, or nausea. If you have these signs, the heater may not be working properly. Get fresh air immediately! Have heater serviced. Some people are more affected by carbon monoxide than others. These include pregnant women, people with heart or lung disease, people who are anemic, those under the influence of alcohol, and those living in high altitudes.

NATURAL AND PROPANE/LP GAS: Natural and Propane/LP gases are odorless. An odor-making agent is added to the gas. The odor helps you detect a gas leak. However, the odor added to the gas can fade. Gas may be present even though no odor exists. Make certain you read and understand all warnings. Keep this manual for reference. It is your guide to operating this heater safely.

WARNING:

If the heater is being installed in a residential garage, it must be secured firmly to the wall, a minimum of 18 in. (457mm) above the floor. The heater must be located so that it is protected against any possibility of damage by a moving vehicle, etc.

Raising the heater will reduce BUT NOT eliminate the possibility of lighting the vapor of any flammable liquids which may be improperly stored or accidentally spilled. If the smell of gasoline is present, do not operate this heater until the area has been properly ventilated.

SAFETY INFORMATION

WARNING: Do not use any accessories not approved for use with this heater.

CALIFORNIA PROPOSITION 65
Fuels used in gas or oil fired appliances and the products of combustion of such fuels contain chemicals known to the state of California to cause cancer, birth defects or other reproductive harm. This product contains chemicals, including lead and lead compounds, known to the state of California to cause cancer, birth defects or other reproductive harm. ***Wash hands after handling.***

1. Do not place Propane/LP supply tank(s) inside any structure. Place Propane/LP supply tank(s) outdoors.
2. Only the IR6 Series can be installed in a bedroom or bathroom.
   When installing in a bedroom or bathroom the heater MUST be mounted to the wall (See Wall Mounting, Page 13). All other models cannot be installed in a bathroom or bedroom.
3. This heater needs fresh air ventilation to run properly. This heater has an Oxygen Depletion Sensing (ODS) safety shutoff system. The ODS shuts down the heater if not enough fresh air is available. See Air for Combustion and Ventilation, pages 7 through 9. If heater keeps shutting off, see Troubleshooting, pages 23 through 26.
4. Keep all air openings in front, top and bottom of heater free of objects and debris to ensure adequate air for proper combustion.
5. If heater shuts off, do not relight until you have provided fresh, outside air. If heater keeps shutting off, have it serviced.
6. Do not run heater:
   - Where flammable liquids or vapors are used or stored.
   - Under dusty conditions.
7. Before using furniture polish, wax, carpet cleaner, or similar products, turn heater and pilot off. If heated, the vapors from these products may create a white powder residue within burner box or on adjacent walls or furniture.
8. Do not use heater if any part has been under water. Immediately call a qualified service technician to inspect the room heater and to replace any part of the control system and any gas control which has been under water.
9. Turn off and unplug heater and let cool before servicing. Only a qualified service person should service and repair heater.
10. To prevent performance problems, do not use propane/LP fuel tank of less than 100 lbs. capacity.
11. **WARNING:** Do not allow fans to blow directly into the heater. Avoid any drafts that alter burner flame patterns.
12. SAVE THESE INSTRUCTIONS.

SAFETY PILOT
This heater has a pilot with an Oxygen Depletion Sensing (ODS) safety shutoff system.
The ODS/pilot shuts off the heater if there is not enough fresh air and cuts off main burner gas in the event of flame out.

LEG KIT(Select models)
2 support legs and 4 support leg screws are included for floor mounting the heater. See page 13.
NOTE: This is an optional accessory and is not required for operation of the heater.

ELECTRONIC PUSH BUTTON IGNITION SYSTEM
This heater is equipped with an electronic push button ignition system. This system requires one AAA battery (provided).

THERMOSTAT HEAT CONTROL(SELECT MODELS)
The control automatically cycles the burner on and off to maintain a desired room temperature. See page 24.

FAN KIT(SELECT MODELS)
The fan kit helps to distribute the warmed air into the space more rapidly.
NOTE: This is an optional accessory and is not required for operation of the heater.

State of Massachusetts: The installation must be made by a licensed plumber or gas fitter in the Commonwealth of Massachusetts. Sellers of unvented propane or natural gas-fired supplemental room heaters shall provide to each purchaser a copy of 527 CMR 30 upon sale of the unit.

In the State of Massachusetts, unvented propane or natural gas-fired space heaters shall be prohibited in bedrooms and bathrooms.

In the State of Massachusetts the gas cock must be a T-handle type. The State of Massachusetts requires that a flexible appliance connector cannot exceed three feet in length.

LOCAL CODES
Install and use heater with care. The installation must conform with local codes or, in the absence of local codes, with the latest edition of The Nation Fuel Gas Code, ANSI Z223.1/NFPA 54

*Available from:
American National Standard Institute, Inc.
1430 Broadway
New York, NY 10018

National Fire Protection Association, Inc.
1 Batterymarch Park
Quincy, MA 02269-9101

This heater is designed for vent-free operation. State and local codes in some areas prohibit, restrict and or have special requirements for vent-free heaters.

PREPARING FOR INSTALLATION

Before beginning assembly or operation of the product, make sure all parts are present. Compare parts with package contents list. If any part is missing or damaged, do not attempt to assemble, install or operate the product. Contact customer service for replacement parts.

UNPACKING

1. Remove heater from carton.
2. Remove all protective packaging applied to heater for shipping
3. Verify all contents are present.
   NOTE: Support Leg Screw (M4*15) (Select Models), Wood Screw (ST4.8*45-16), Expansion Bracket Screw (ST4.8*15-16), and Expansion Bracket come with (2) extra each.

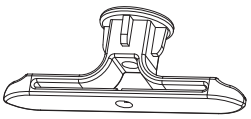

Expansion Bracket x 4

Expansion Bracket Screw (ST4.8*15-16) x 4

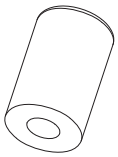

Wall Hanging Spacer x 2

Support Leg Screw (M4*15) x 4 (Select Models)

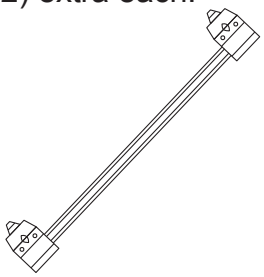

Wall Mounting Bracket x 1

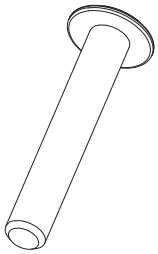

Wall Hanging Spacer Screw (M4*25) x 2

Wood Screw (ST4.8*45-16) x 4

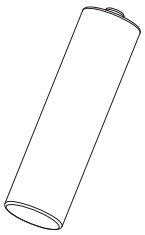

AAA Battery x 1

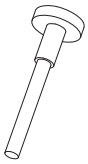

Expansion Bracket Tool x 1

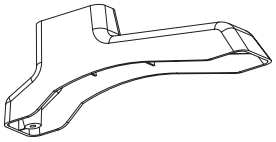

Support Leg x 2 (Select Models)

4. Check heater for any shipping damage. If heater is damaged, promptly inform dealer where you bought the heater.

WATER VAPOR: A BY-PRODUCT OF UNVENTED ROOM HEATERS

Water vapor is a by-product of gas combustion. An unvented room heater produces approximately one (1) ounce (30 mL) of water for every 1,000 BTUs (.3 Kw) of gas input per hour. An unvented room heater is intended as a supplemental heater rather than a primary heat source. In most supplemental heat applications, the water vapor does not create a problem.
In most applications, the water vapor enhances the low humidity atmosphere experienced during cold weather.
The following steps will help ensure that water vapor does not become a problem:

1. Be sure the heater is the proper size for the application, including adequate combustion air and circulation air.
2. If there is high humidity, a dehumidifier may be used to help lower the water vapor content of the air.
3. Do not use an unvented room heater as the primary heat source.

AIR FOR COMBUSTION AND VENTILATION

CAUTION: This heater shall not be installed in a room or space unless the required volume of indoor combustion air is provided by the method described in the National Fuel Gas Code, ANSI Z223.1/NFPA54, the International Fuel Gas Code, or applicable local codes.

PRODUCING ADEQUATE VENTILATION

All spaces in homes fall into one of the three following ventilation classifications:
1. Unusually Tight Construction
2. Unconfined Space
3. Confined Space

The information on pages 7 through 9 will help you classify your space and provide adequate ventilation.

Confined and Unconfined Space

A confined space as a space whose volume is less than 50 cu. ft. per 1,000 BTU/hr (4.8 m^3 per kw) of the aggregate input rating of all appliances installed in that space and an unconfining space as a space whose volume is not less than 50 cu. ft. per 1,000 BTU/hr (4.8 m^3 per kw) of the aggregate input rating of all appliances installed in that space. Rooms connecting directly with the space in which the appliances are installed*, through openings not furnished with doors, are considered a part of the unconfined space.

This heater shall not be installed in a confined space or unusually tight construction unless provisions are provided for adequate combustion and ventilation air.

* Adjoining rooms are connecting only if there are doorless passageways or ventilation grills between them.

Unusually Tight Construction

The air that leaks around doors and windows may provide enough fresh air for combustion and ventilation. However, in buildings of unusually tight construction, you must provide additional fresh air.

Unusually tight construction is defined as construction where:

a) walls and ceilings exposed to the outside atmosphere have a continuous water vapor retarder with a rating of one perm (6x10-11kg per pa-sec-m2) or less with openings gasketed or sealed and

b) weather stripping has been added on windows that can be opened and on doors and

c) caulking or sealants are applied to areas such as joints around window and door frames, between sole plates and floors, between wall-ceiling joints, between wall panels, at penetrations for plumbing, electrical, and gas lines, and at other openings.

If your home meets all of the three criteria above, you must provide additional fresh air. See “Ventilation Air From Outdoors” (page 9). If your home does not meet all of the three criteria above, proceed to “Determining Fresh-Air Flow For Heater Location”.

DETERMINING FRESH-AIR FLOW FOR HEATER LOCATION

Determining if You Have a Confined or Unconfined Space

Use this worksheet to determine if you have a confined or unconfined space.

Space: Includes the room in which you will install heater plus any adjoining rooms with doorless passageways or ventilation grills between the rooms.

1. Determine the volume of the space Length × Width × Height = cu. ft. (volume of space)
   Example: Space size 20 ft. (length) × 16 ft.(width) × 8 ft. (ceiling height) = 2560 cu. ft. (volume of space)

If additional ventilation to adjoining room is supplied with grills or openings, add the volume of these rooms to the total volume of the space.

2. Divide the space volume by 50 cu. ft. to determine the maximum BTU/hr the space can support.
   _____ (volume of space) ÷ 50 cu. ft.= (Maximum BTU/hr the space can support)
   Example: 2560 cu. ft. (volume of space) ÷ 50 cu. ft. = 51.2 or 51,200 (maximum BTU/hr the space can support)
3. Add the BTU/hr of all fuel burning appliances in the space.
   Vent-free heater _____ BTU/hr
   Gas water heater* _____BTU/hr
   Gas furnace _____BTU/hr
   Vented gas heater _____BTU/hr Example:
   Gas heater logs _____BTU/hr Gas water heater 30,000 BTU/hr
   Other gas appliances*+ ____BTU/hr Vent-free heater + 26,000 BTU/hr
   Total = ____BTU/hr Total = 56,000 BTU/hr

*Do not include direct-vent gas appliances. Direct-vent draws combustion air from the outdoors and vents to the outdoors.

4. Compare the maximum BTU/hr the space can support with the actual amount of BTU/hr used.
   _____ BTU/hr (maximum the space can support)
   _____ BTU/hr (actual amount of BTU/hr used).
   Example : 51,200 BTU/hr (maximum the space can support) 56,000 BTU/hr (actual amount of BTU/hr used)

The space in the above example is a confined space because the actual BTU/hr used is more than the maximum BTU/hr the space can support.

You must provide additional fresh air. Your options are as follows:

a) Rework worksheet, adding the space of an adjoining room. If the extra space provides an unconfined space, remove door to adjoining room or add ventilation grills between rooms. See “Ventilation Air From Inside Building,” page 9.

b) Vent room directly to the outdoors. See “Ventilation Air From Outdoors”, page 9.

c) Install a lower BTU/hr heater if lower BTU/hr size makes room unconfined. If the actual BTU/hr used is less than the maximum BTU/hr the space can support, the space is an unconfined space. You will need no additional fresh air ventilation.

Ventilation Air From Inside Building

This fresh air would come from adjoining unconfined space. When ventilating to an adjoining unconfined space, you must provide two permanent openings: one within 12 in. of the wall connecting the two spaces (see options 1 and 2, Fig. 1). You can also remove door into adjoining room (see option 3, Fig. 1). Follow the National Fuel Gas Code NFPA 54/ANS Z223.1. Air for Combustion and Ventilation for required size of ventilation grills or ducts.

Fig. 1 - Ventilation Air from Inside Building

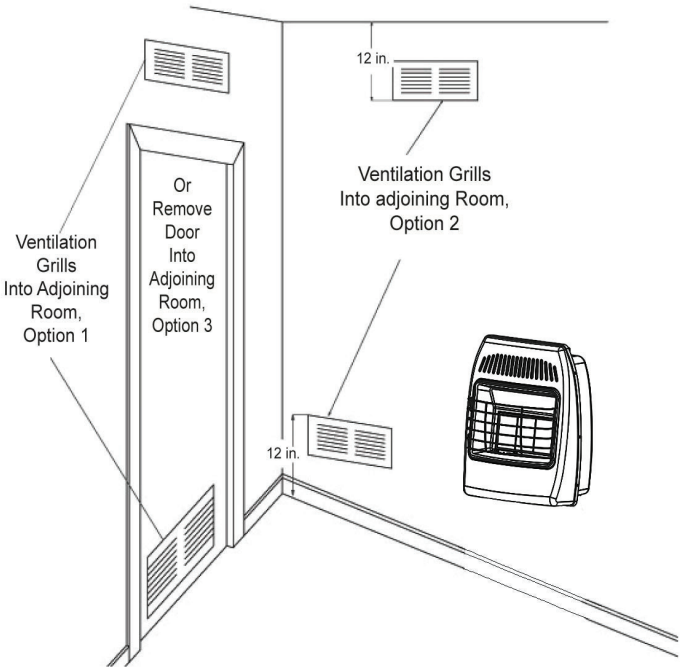

Ventilation Air From Outdoors

Provide extra fresh air by using ventilation grills or duct. You must provide two permanent openings: one within 12 in. of the ceiling and one within 12 in. of the floor. Connect these items directly to the outdoors or spaces open to the outdoors. These spaces include attics and crawl spaces. Follow the National Fuel Gas Code NFPA 54/ANS Z223.1. Air for Combustion and Ventilation for required size of ventilation grills or ducts.

IMPORTANT: Do not provide openings for inlet or outlet air into attic if attic has a thermostat-controlled power vent. Heated air entering the attic will activate the power vent. Rework worksheet, adding the space of the adjoining unconfined space. The combined spaces must have enough fresh air to supply all appliances in both spaces.

Fig. 2 - Ventilation Air from Outdoors

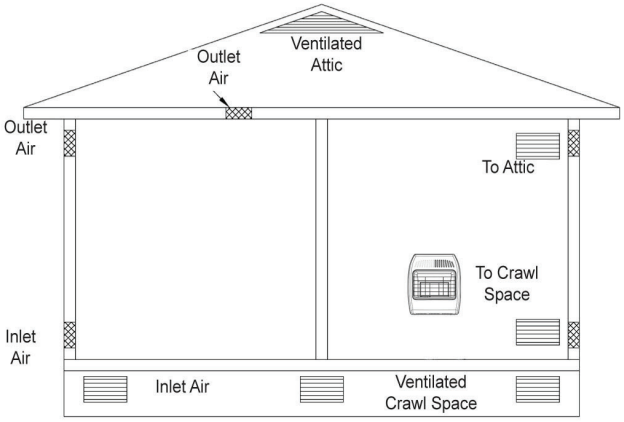

INSTALLATION

⚠ **NOTICE:** This heater is intended for use as supplemental heat. Use this heater along with your primary heating system. Do not install this heater as your primary heat source.

⚠ **WARNING:** A qualified technician must install heater. Follow all local codes.

⚠ **WARNING:** Maintain the minimum clearances. If possible, provide greater clearances from the floor, ceiling, and adjoining wall than required.

⚠ **CAUTION:** This heater creates warm air currents. These currents move heat to wall surfaces next to heater. Installing heater next to vinyl or cloth wall coverings or operating heater where impurities (such as tobacco smoke, candles, cleaning fluids, oil or kerosene lamps, etc.) in the air exist, may cause walls to discolor.

CLEARANCES TO COMBUSTIBLES

Carefully follow the instructions below. This heater can be mounted on the wall or on the floor using the support legs (Select models).

⚠ **WARNING**: Maintain the minimum clearances shown in (See Fig. 3). If you can, provide greater clearances from floor, ceiling, and joining wall.

Fig. 3 - Mounting clearances as viewed from front of heater (inches)

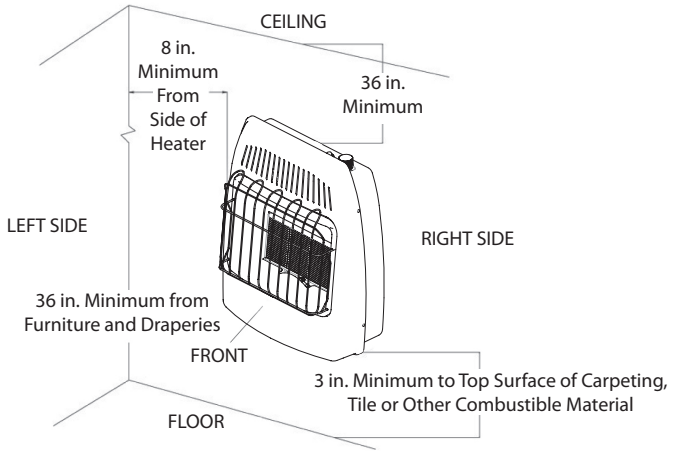

*A Second Side Wall Must be at Least 18in. Away from the Other Side of the Heater.

MINIMUM CLEARANCE TO COMBUSTIBLES				
*LEFT / RIGHT	TOP	BOTTOM	FRONT	Rear
8 in.	36 in.	3 in.	36 in.	0 in. to Spacer
Top clearance is from top of heater to ceiling, wood shelf or other combustible material				
Bottom clearance is from bottom of heater to surface of carpet, tile or other combustible material.				

*A second side wall must be at least 18 in. away from the other side of the heater. Always maintain a minimum of 36 in. clearance from furniture and draperies.

*For the installation in residential garages please refer to the bottom of page 4.

INSTALLING IGNITOR BATTERY

- Battery is included.
- Unscrew ignitor cap and insert included battery negative (flat) side down (See Fig. 7). Replace Ignitor cap.
- Be sure to observe proper polarity (+/-) when installing or replacing the battery. Damage due to improper battery installation may void the warranty on the product.
- Install/replace the battery according to the type and quantity stated in table below.
- Remove battery when depleted.
- For long periods of non-operation, remove the battery from all components for safety.

⚠ **WARNING:** Do not use rechargable silver oxide cell batteries.

Component	Type of Battery	Battery Qty.
Ignitor	AAA	1

Do NOT dispose of batteries in fire. Improper disposal may cause batteries to leak or explode.

Fig. 7 - Installing Ignitor Battery

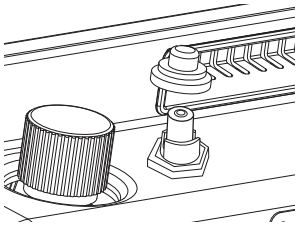

Fig. 8 - Fan Electric Supply

INSTALLING FAN (OPTIONAL)

IMPORTANT: Optional fan is not approved for use in IR6 series wall heaters.

⚠ **WARNING:** Electrical Grounding Instructions
This appliance is equipped with a three-prong (grounding) plug for your protection against shock hazard and should be plugged directly into a properly grounded three-prong receptacle (See Fig. 8).

1. Wall mounted heater must be disconnected from gas supply and removed from wall before installing fan accessory. Contact a qualified service person to do this.
2. Remove fan knock-out panel using a screwdriver (See Fig. 9). Attach Fan to the rear panel of the heater using the four screws provided.

NOTE: Be sure the rocker switch is positioned in the upper right corner. (See Fig. 10).

3. This fan is equipped with manual “MAN” and automatic “AUTO” settings (See Fig. 11 on page 13). Set the rocker switch to “MAN” for manual mode, allowing the fan to continuously run until the rocker switch is returned to the OFF “O” position. Set the rocker switch to “AUTO” for the automatic mode, which will turn the fan on and off based on ambient room temperature. It may take 5 to 10 minutes for the fan to come on when the unit is cold.

NOTE: If any of the original wire as supplied with the appliance must be replaced, it must be replaced with a wire of at least an equal temperature rating. Refer to Fig. 12 on page 13 for wiring diagram.

⚠ **CAUTION:** Label all wires prior to disconnection when servicing controls. Wiring errors can cause improper and dangerous operation. Verify proper operation after servicing.

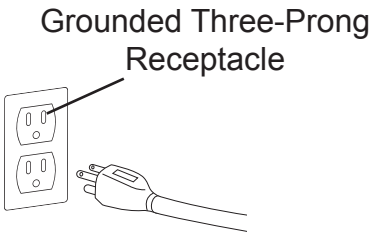

Fig. 9 - Knock-out Panel

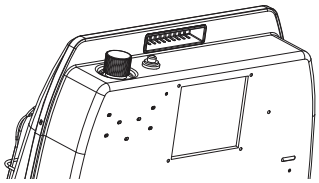

Fig. 10 - Attaching Fan

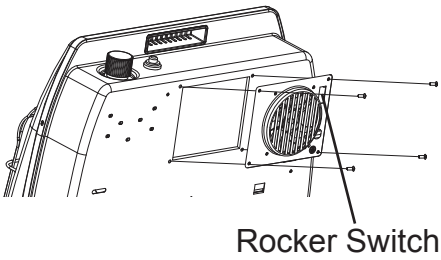

Fig. 11 - Operating Fan

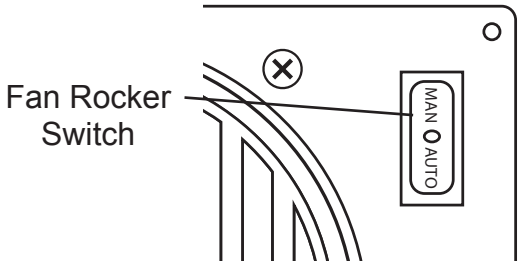

Fig. 12- Fan Wiring Diagram

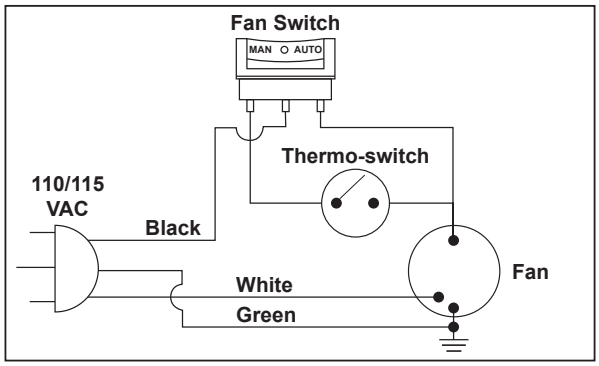

LOCATING HEATER

This heater is designed to be mounted on a wall or on a floor, using the Support Legs (Select Models) included with select models.
For convenience and efficiency, install heater:

1. Where there is easy access for operation, inspection, and service.
2. In the coldest part of room.
3. A minimum of 3' away from furniture and draperies.

FLOOR MOUNTING (SELECT MODELS)

(Cannot be done in bedroom or bathroom)
(Cannot be used for garage and ice-house heaters)
NOTE: This is an optional accessory and is not required for operation of the heater.
Before installing Support Legs to heater base, please make sure you have the following items:
(2) Support Legs
(4) Support Leg Screws (M4*15)

1. Set down a blanket onto the table where the heater will be placed for leg installation to prevent scratching of the table and/or the heater.
2. Set back of heater on table with the bottom of heater extending outside the table edge.
3. Fasten Support Legs to heater using Support Leg Screws (Fig.13)

Note: If the heater is to be installed directly on carpeting, tile or other combustible material, other than wood flooring, the appliance shall be installed on a metal or wood panel extending the full width and depth of the appliance.

3. Once positioned, secure heater to the floor using Support Leg Screws (M4*15) and mounting holes found on heater Support Legs (See Fig. 14).

Fig. 13 - Attaching Legs

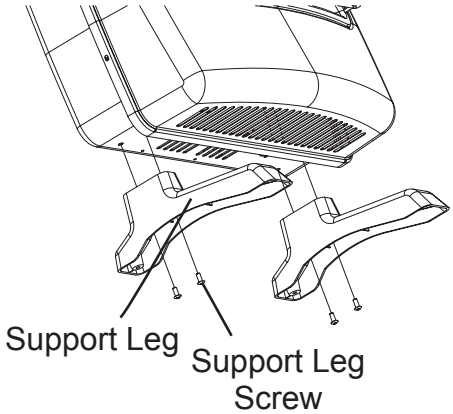

Fig. 14 - Securing Support Leg

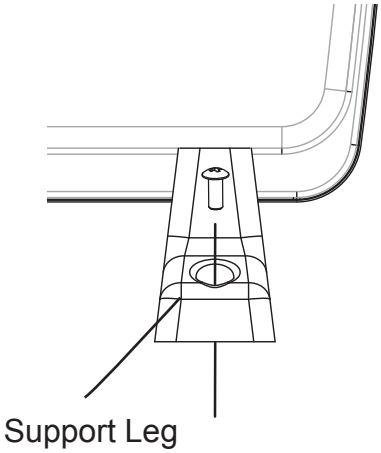

WALL MOUNTING

⚠ **WARNING:** Failure to position the parts in accordance with these diagrams or failure to use only parts specifically approved with this heater may result in property damage or personal injury.

Mounting Bracket
The mounting bracket is located separately from the unit, but packed inside the same box.

Methods For Attaching Mounting Bracket To Wall

⚠ WARNING

ELECTRICAL, PLUMBING OR GAS LINES MAY BE IN WALL.
Before cutting, drilling or hammering verify their location. If needed, contact your electrician, plumber or service person.

Use only the last hole on each end of mounting bracket to attach bracket to wall. Attach mounting bracket to a wall only in one of two ways:

1. Attaching to wall stud: This method provides the strongest hold. Insert wood screws (ST.8*45-16) through mounting bracket and into wall studs.

2. Attaching to expansion bracket: This method allows you to attach mounting bracket to hollow walls (wall areas between studs) or to solid walls (concrete or masonry).

Decide which method better suits your needs. Either method will provide a secure hold for the mounting bracket.

Marking Screw Locations

1. Tape mounting bracket to wall where heater will be located. Make sure mounting bracket is level.

2. Mark screw locations on wall (See Fig. 16).
   Note: Mark only last hole on each end of mounting bracket. Insert (2) wood screws (ST.8*45-16) total through these holes only.

3. Remove tape and mounting bracket from wall.

Attaching Mounting Bracket To Wall

Note: Expansion bracket, wood screws (ST.8*45-16), and wall hanging spacers are in hardware package. The hardware package is provided with heater.

Attaching to Wall Stud Method

For attaching mounting bracket to wall studs:

1. Drill holes at marked locations using 9/64-inch drill bit.

2. Place mounting bracket onto wall. Line up last hole on each end of bracket with holes drilled in wall.

3. Insert wood screws (ST.8*45-16) through bracket and into wall studs.

4. Tighten wood screws (ST.8*45-16) until mounting bracket is firmly fastened to wall studs.

5. Check that the bracket is secure before mounting heater!

Fig. 16 - Mounting Bracket Clearances (inches)

Series IR6/12

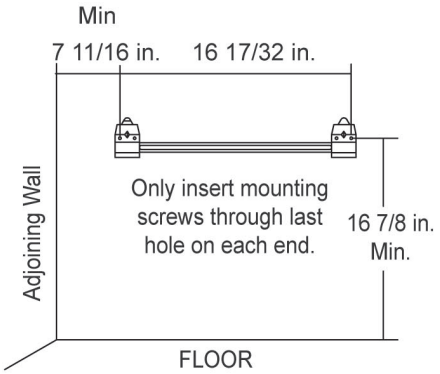

Series IR18/30

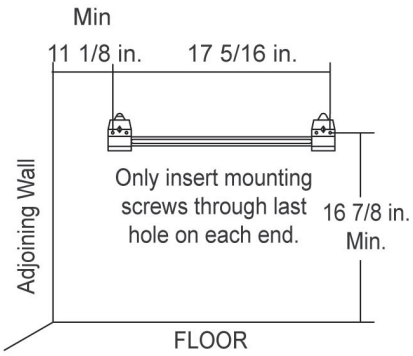

Attaching to Expansion Bracket Method
For attaching mounting bracket to hollow walls (wall areas between studs) or solid walls (concrete or masonry):

1. Drill holes at marked locations using 5/16-inch drill bit. For solid walls (concrete or masonry), drill at least 1 inch deep.

2. Fold wall expansion bracket as shown in (See Fig. 17).

3. Insert wall expansion bracket (wings first) into hole. Tap expansion bracket flush to wall.

4. For thin walls (1/2 inch or less), insert expansion bracket tool into expansion bracket. Push expansion bracket tool to “pop” open expansion bracket wings (See Fig. 18).

⚠ **IMPORTANT**: Do not hammer expansion bracket tool! For thick walls (over 1/2 inch thick) or solid walls, do not pop open wings.

5. Place mounting bracket onto wall. Line up last hole on each end of bracket with expansion bracket.

6. Insert expansion bracket screws (ST4.8*15-16) through wall mounting bracket and into expansion brackets.

7. Tighten expansion bracket screws (ST4.8*15-16) until mounting bracket is firmly fastened to wall.

8. Check that the bracket is secure before mounting heater!

Attaching Wall Hanging Spacers to Heater

⚠ **WARNING:** Failure to properly install the wall hanging spacers may result in property damage, personal injury or even death.

1. Locate spacer mounting holes on the lower right/left sections of the heater back panel.

2. Secure (2) wall hanging spacers to heater back panel using (2) wall hanging spacer screws (M4*25) (See Fig. 19a).

Placing Heater On Mounting Bracket

1. Locate two horizontal slots on back panel of heater.

2. Place heater onto mounting bracket. Slide horizontal slots onto stand-out tabs on mounting bracket. Be sure spacers rest evenly against wall (See Fig. 19b).

Fig. 17 - Folding the Expansion Bracket

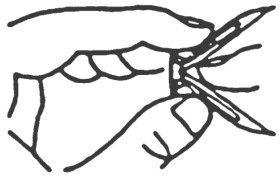

Fig. 18 - Popping Open Anchor Wing For Thin Walls

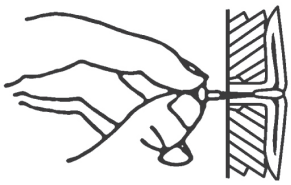

Fig. 19a - Attaching Wall Hanging Spacers to Heater

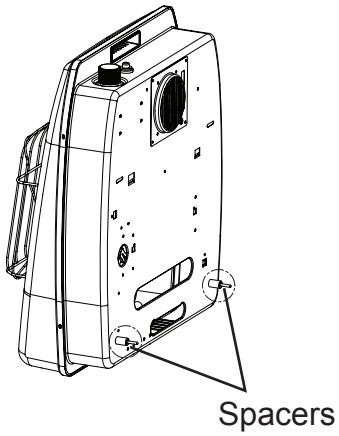

Fig. 19b - Mounting Heater Onto Mounting Bracket

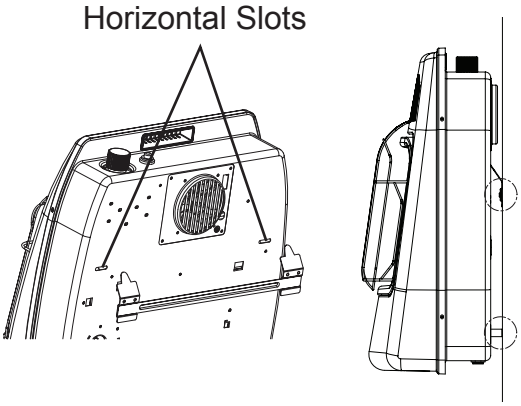

CONNECTING TO GAS SUPPLY

⚠ **WARNING**: A qualified service technician must connect heater to gas supply. Follow all local codes.

⚠ **IMPORTANT:** This appliance requires a 3/8-inch NPT (National Pipe Thread) inlet connection to the pressure regulator. Never connect the heater to private (non-utility) gas wells, commonly known as wellhead gas.

⚠ **WARNING**: Do not overtighten gas connections.

⚠ **CAUTION**: Use only new, black iron or steel pipe. Internally tinned copper tubing may be used in certain areas. Check your local codes. Use pipe of 1/2-in. diameter or greater to allow proper gas volume to heater. If pipe is too small, undue loss of pressure will occur.

⚠ **CAUTION:** Check your gas line pressure before connecting heater to gas line. Gas line pressure must be a minimum 6" WC for NG and 11" WC for LP with a max pressure of 14"WC. If gas line pressure is higher, heater regulator damage could occur.

⚠ **CAUTION**: Never connect heater directly to an LP supply. This heater requires an external regulator (not supplied). Install the external regulator between the heater and gas supply.

⚠ **CAUTION**: Avoid damage to regulator. Hold gas regulator with wrench when connecting into gas piping and/or fittings.

⚠ **CAUTION**: Use pipe joint sealant that is resistant to gas (Propane or Natural Gas).

Typical Inlet Pipe Diameters
Use 3/8-inch black iron pipe or greater. Installation must include an equipment shutoff valve, union, and plugged 1/8-inch NPT tap.
Locate NPT tap within reach for test gauge hook up. NPT tap must be upstream from heater (see Fig. 20).

⚠ **IMPORTANT**: Install an equipment shutoff valve in an accessible location. The equipment shutoff valve is for turning on or shutting off the gas to the appliance.

Apply pipe joint sealant lightly to male threads. This will prevent excess sealant from going into pipe. Excess sealant in pipe could result in clogged heater valves.

Install sediment trap in supply line as shown (See Fig. 20). Place sediment trap where it is within reach for cleaning. Place sediment trap where trapped matter is not likely to freeze. A sediment trap traps moisture and contaminants. This keeps them from going into heater controls. If sediment trap is not installed or is installed wrong, heater may not run properly.

Fig. 20 - Gas Connection

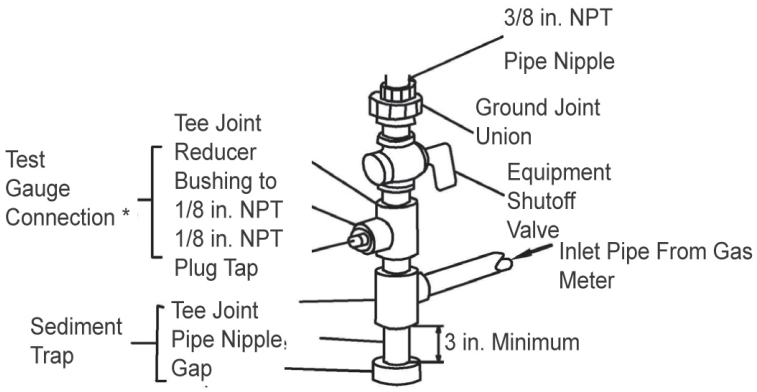

CHECKING GAS CONNECTIONS

⚠ **WARNING:** Test all gas piping and connections for leaks after installing or servicing. Correct all leaks immediately.

⚠ **WARNING:** Never use an open flame to check for a leak. Apply a 50/50 mixture of liquid soap and water to all joints. If bubbles form, there may be a leak. Correct all leaks immediately.

Pressure Testing Gas Supply Piping System
Test Pressures In Excess Of 1/2 PSIG (3.5kPa)

The appliance and its appliance main gas valve must be disconnected from the gas supply piping system during any pressure testing of that system at test pressures in excess of ½ psi (3.5 kPa).

Pressure Testing Gas Supply Equal To or less than
1/2 PSIG (3.5kPa)

The appliance must be isolated from the gas supply piping system by closing its equipment shut-off valve during any pressure testing of the gas supply piping system at test pressures equal to or less than
½ psi (3.5 kPa).

Leak Testing Heater Gas Internal Connections

1. Open equipment shutoff valve (See Fig. 21).
2. Make sure control knob of heater is in the OFF position.
3. Open gas supply tank valve (LP systems).
4. Check all joints from equipment shutoff valve to control valve. Apply 50/50 mixture of liquid soap and water to gas joints. If bubbles form, there may be a leak.
5. Light heater (see Operation, page 18). Check all other internal joints for leaks.
6. Turn off heater (see "To Turn Off Gas to Appliance," page 19).

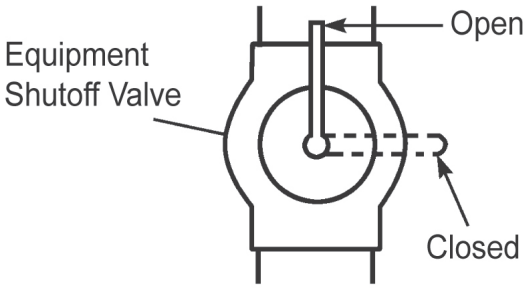

Fig. 21 - Equipment Shut -off Valve

FOR YOUR SAFETY READ BEFORE LIGHTING

WARNING: If you do not follow these instructions exactly, a fire or explosion may result causing property damage, personal injury or loss of life.

A. This appliance has a pilot which must be lighted using the Ignitor. When lighting the pilot, follow these instructions exactly.

B. BEFORE LIGHTING smell all around the appliance area for gas. Be sure to smell next to the floor because some gas is heavier than air and will settle on the floor.

WHAT TO DO IF YOU SMELL GAS
- Do not try to light any appliance.
- Do not touch any electrical switch; do not use any phone in your building.
- Immediately call your gas supplier from a neighbor's phone. Follow the gas supplier's instructions.
- If you cannot reach your gas supplier, call the fire department.

C. Use only your hand to push in or turn the gas control knob. Never use tools. If the knob will not push in or turn by hand, don't try to repair it, call a qualified service technician. Forced or attempted repair may result in a fire or explosion.

D. Do not use this appliance if any part has been under water. Immediately call a qualified service technician to inspect the appliance and to replace any part of the control system and any gas control, which has been under water.

LIGHTING INSTRUCTIONS

MANUAL GAS CONTROL

1. STOP! Read the safety information above on this page.
2. Turn off all electric power to the appliance.
3. Push in gas control knob slightly and turn clockwise ↷ to OFF "◯" position. (See Fig. 22a)

NOTE: Knob cannot be turned from PILOT "⊗" to OFF "◯" unless knob is pushed in slightly. Do not force.

4. Wait (5) minutes to clear out any gas. Then smell for gas, including near the floor. If you smell gas, STOP! Follow "B" in the safety information above. If you don't smell gas, go to the next step.
5. Push in gas control knob slightly and turn counterclockwise ↶ to the PILOT "⊗" position. (See Fig. 23a) Depress control knob.
6. With control knob depressed, push down on the ignitor button until the pilot lights. The pilot is visible, centered below the main burner, behind the glass panel. (See Fig. 24 on page 19)
7. Keep control depressed for (30) seconds after pilot lights. Release control knob.

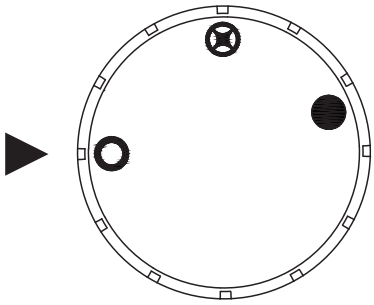

Fig. 22a

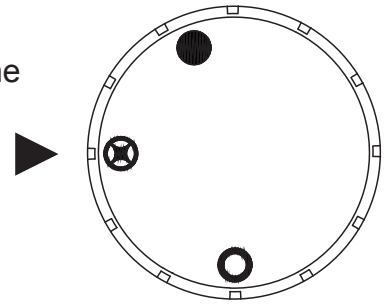

Fig. 23a

Note: If pilot goes out repeat steps 3 through 7. Wait (1) minute before attempting to light pilot again.
If after several tries the pilot still goes out, turn the gas control knob clockwise ↷ to the OFF "◯" position and call your service technician or gas supplier.

LIGHTING INSTRUCTIONS

If the control knob does not pop up when released, stop and immediately and call your service technician or gas supplier.

8. Turn on all electric power to the appliance.
9. Turn control knob counter clockwise to desired setting.

Burner Patterns (Manual Control)

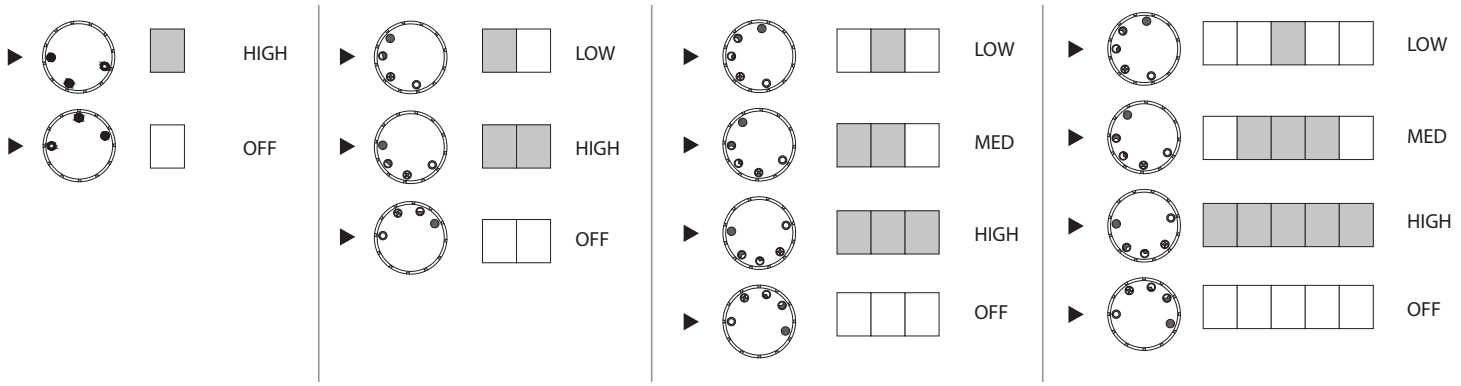

THERMOSTAT GAS CONTROL

1. STOP! Read the safety information on the previous page.
2. Turn off all electric power to the appliance.
3. Turn control knob clockwise to "OFF" position. (See Fig. 22b)
4. Wait (5) minutes to clear out any gas. Then smell for gas, including near the floor. If you smell gas, STOP! Follow “B” in the safety information above. If you don’t smell gas, go to the next step.
5. Turn knob counterclockwise to the "PILOT" position. (See Fig. 23b) Depress control knob.
6. With control knob depressed, push down on the ignitor button until the pilot lights. The pilot is visible, centered below the main burner, behind the glass panel. (See Fig. 24 on page 19)
7. Keep control depressed for (30) seconds after pilot lights. Release control knob.

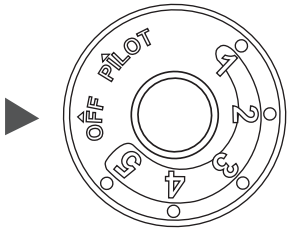

Fig. 22b

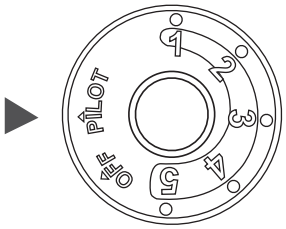

Fig. 23b

Note: If pilot goes out repeat steps 3 through 7. Wait (1) minute before attempting to light pilot again. If after several tries the pilot still goes out, turn the gas control knob clockwise to the "OFF" position and call your service technician or gas supplier. If the control knob does not pop up when released, stop and immediately and call your service technician or gas supplier.

8. Turn on all electric power to the appliance.
9. Turn control knob counter clockwise to desired setting.

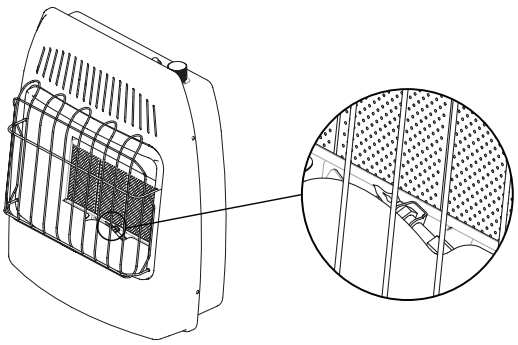

Fig. 24 - Pilot Flame Location

LIGHTING INSTRUCTIONS

Burner Patterns (Thermostatic Control)

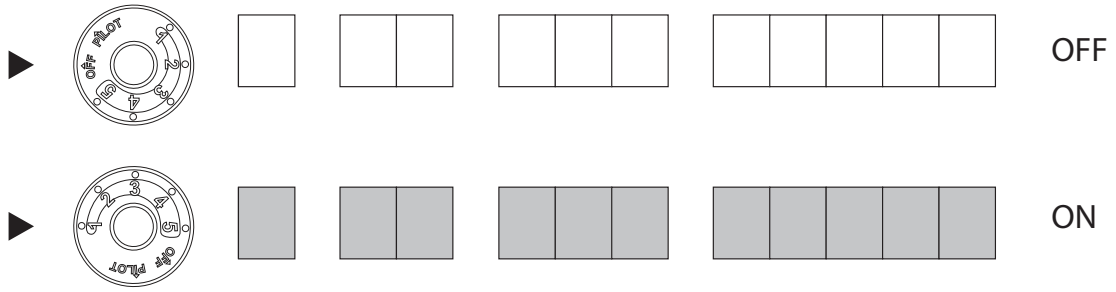

TO TURN OFF GAS TO APPLIANCE

1. Turn off all electric power to the appliance if service is to be performed.
2. Push in gas control knob slightly and turn clockwise ↷ to "OFF" or "◯" position. DO NOT FORCE.

THERMOSTATIC CONTROL OPERATION (SELECT MODELS)

The thermostat used on this heater senses the room temperature. At times the room may exceed the set temperature. If so, the burner will shut off. The burner will cycle back on when room temperature drops below the set temperature. The control knob can be set to any comfort level between "HIGH" (5) and "LOW"(1) (See Fig. 25).

MANUAL CONTROL OPERATION

Manual valves remain burning in the desired setting until manually turned to OFF "◯"(See Fig. 25).

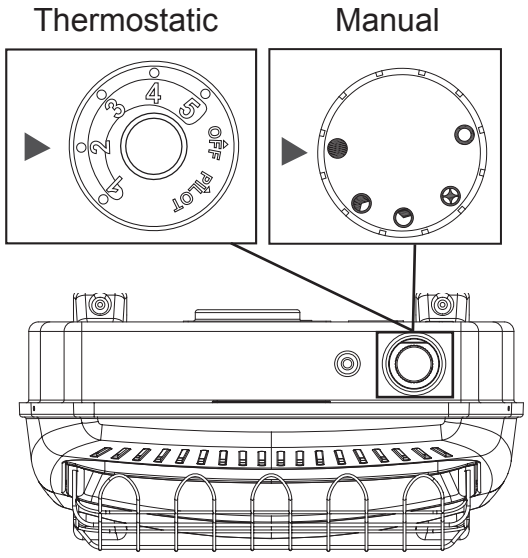

Fig. 25 - Control Knob Position

INSPECTING BURNERS

Check pilot flame pattern daily when in use and at least yearly by a qualified service agency.

PILOT FLAME PATTERN

Fig. 26 shows a correct pilot flame pattern. Fig. 27 shows an incorrect pilot flame pattern. The incorrect pilot flame is not touching the thermocouple. This will cause the thermocouple to cool, which shuts the heater off. If pilot flame pattern is incorrect:

- turn heater off (see “To Turn Off Gas to Appliance” on page 19)
- see Troubleshooting pages 23 through 26.

Fig. 26 - Correct Pilot Flame Pattern

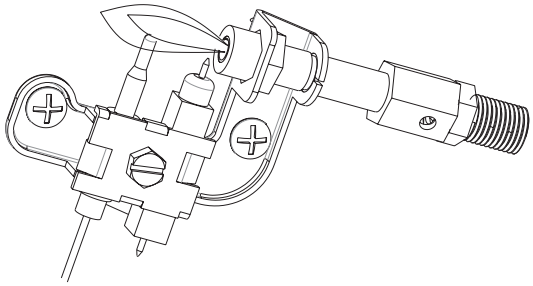

Fig. 27 - Incorrect Pilot Flame Pattern

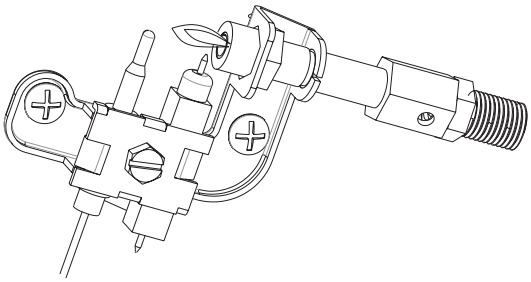

⚠ **WARNING**: If yellow tipping occurs, your heater could produce increased levels of carbon monoxide. If burner flame pattern shows yellow tipping, follow instructions under BURNER FLAME PATTERN, page 21.

Notice: Do not mistake orange flames with yellow tipping. Dirt or other fine particles enter the heater and burn causing brief patches of orange flame.

BURNER FLAME PATTERN

Fig. 28 shows a correct burner flame pattern. Fig. 29 shows an incorrect burner flame pattern with lifting, and excessive flame height.
If burner flame is incorrect:

- turn heater off (see “To Turn Off Gas to Appliance”, page 19).
- see Troubleshooting, pages 23 through 26.

Fig. 28 - Correct/Normal Flame Pattern with short flames with Control Knob Set to High Flame (5)

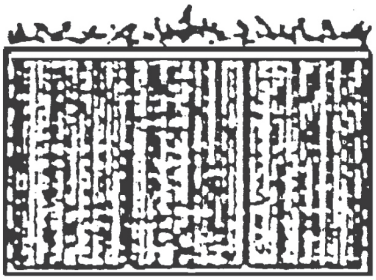

Fig. 29 - Incorrect/Abnormal Flame Pattern with tall flames with Control Knob Set to High Flame (5)

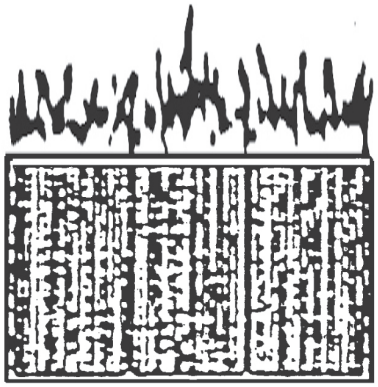

NOTE: Before servicing you will need to remove the front panel of the heater. There are 4 Philips head screws, 2 on the left side and 2 on the right, securing the front panel to the heater (See Fig. 30). Always allow the unit to cool for at least thirty minutes before attempting to remove the front panel.

Fig. 30 - Front Panel Removal

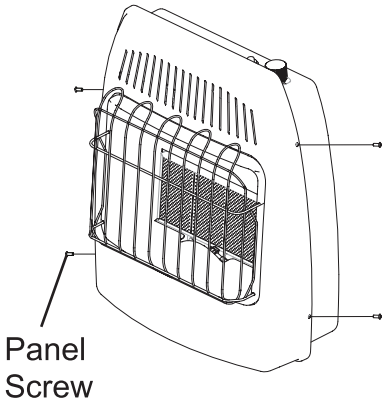

⚠ **WARNING:** Turn off heater, unplug electrical cord and let cool before servicing.

⚠ **CAUTION:** You must keep control areas, burner, and circulating air passageways of heater clean. Inspect these areas of heater before each use. Have heater inspected yearly by a qualified service person. Heater may need more frequent cleaning due to excessive lint from carpeting, bedding material, pet hair, etc.

⚠ **WARNING:** Failure to keep the primary air opening(s) of the burner(s) clean may result in sooting and propery damage.

CLEANING ODS/PILOT AND BURNER
Use a vacuum cleaner, pressurized air, or a small, soft bristled brush to clean tile face, orifice and primary burner. Look into burner opening and ensure that it is clean.

CLEANING BURNER PILOT AIR INLET HOLE
We recommend that you clean the unit every three months or after 2,500 hours of operation. We also recommend that you keep the burner tube and pilot assembly clean and free of dust and dirt. To clean these parts we recommend using compressed air no greater than 30 PSI. You can use a vacuum cleaner in the blow position. If using compressed air in a can, please follow the directions on the can. If you don't follow directions on the can, you could damage the pilot assembly.

⚠ **CAUTION:** Never use a wire, needle, or similar object to clean ODS/pilot. This can damage ODS/ pilot unit.

1. Shut off the unit, including the pilot. Allow the unit to cool for at least thirty minutes.
2. Remove 4 screws - 2 screws on each side of the front panel.
3. Pull front panel forward.
4. Blow air through the ports/slots and holes in the burner. Also clean the pilot assembly. A yellow tip on the pilot flame indicates dust and dirt in the pilot assembly. There is a small pilot air inlet hole about two inches from where the pilot flame comes out of the pilot assembly (see Fig. 26 & 27 on page 20). With the unit off, lightly blow air through the air inlet hole. You may blow through a drinking straw if air is not available.
5. Replace front panel when completed, using the screws removed.

CLEANING CABINET AIR PASSAGEWAYS
Use a vacuum cleaner or pressurized air to clean.

CLEANING FAN (Select models)
Carefully use a vacuum cleaner or compressed air to keep fan compartment and blades free of dust and debris.

NOTE: The fan motor is pre-lubricated for extended bearing life and requires no further lubrication.

CLEANING EXTERIOR
Use a soft cloth dampened with a mild soap and water mixture.
Wipe the cabinet to remove dust.

TROUBLESHOOTING

⚠ **WARNING:** If you smell gas:

- Shut off gas supply.
- Do not try to light any appliance.
- Do not touch any electrical switch; do not use any phone in your building.
- Immediately call your gas supplier from a neighbor's phone. Follow the gas supplier's instructions.
- If you cannot reach your gas supplier, call the fire department.

IMPORTANT: Operating heater where impurities in air exist may create odors. Cleaning supplies, paint, paint remover, cigarette smoke, cements and glues, new carpet or textiles, etc., create fumes. These fumes may mix with combustion air and create odors.

⚠ **WARNING:** Make sure that power is turned off before proceeding.

⚠ **WARNING:** Turn off and let cool before servicing. Only a qualified service person should service and repair heater.

PROBLEM	POSSIBLE CAUSE	CORRECTIVE ACTION
When Ignitor is pressed in, there is no spark at ODS/ pilot.	1. Ignitor electrode is positioned wrong. 2. Ignitor electrode is broken. 3. Ignitor electrode is not connected to ignitor cable. 4. Ignitor cable is pinched or wet. 5. Damaged ignitor cable. 6. Bad piezo ignitor or ignition module. 7. Bad battery.	1. Replace ODS. 2. Replace ODS. 3. Replace ignitor cable 4. Free ignitor cable if pinched by any metal or tubing. Keep ignitor cable dry. 5. Replace ignitor cable. 6. Replace piezo ignitor or ignition module. 7. Replace the battery.
Unit shuts off after running a few minutes.	1. Gas supply is turned off or equipment shutoff valve is closed. 2. Control knob not fully pressed in while pressing Ignitor. 3. Air in gas lines when installed. 4. ODS / pilot is clogged. 5. Control knob not in PILOT position. 6. Depleted gas supply (propane)	1. Turn on gas supply or open equipment shutoff valve. 2. Fully press in control knob while pressing Ignitor. 3. Continue holding down control knob. Repeat igniting operation until air is removed. 4. Clean ODS/pilot (see Care and Maintenance, page 21) or replace ODS/pilot assembly. 5. Turn control knob to PILOT position. 6. Contact local propane/LP gas company.

PROBLEM	POSSIBLE CAUSE	CORRECTIVE ACTION
ODS/pilot lights but flame goes out when control knob is released.	1. Control knob is not fully pressed in. 2. Control knob is not pressed in long enough. 3. Equipment shutoff valve is not fully open. 4. Thermocouple connection is loose. 5. Thermocouple damaged. 6. Control valve damaged. 7. Inlet gas pressure is too high	1. Press in control knob fully. 2. After ODS/pilot lights, keep control knob pressed in 30-60 seconds. 3. Fully open equipment shutoff valve. 4. Hand tighten until snug, and then tighten ¼ turn more. 5. Replace thermocouple. 6. Contact customer service. 7. Contact your gas supplier to check and adjust the inlet pressure.
Burner(s) does not light afterODS/pilot is lit.	1. Thermostat setting too low. 2. Burner orifice is clogged. 3. Burner orifice diameter is too small. 4. Inlet gas pressure is too low.	1. Turn thermostat knob to a higher setting. 2. Clean burner orifice (see Care and Maintenance, page 21) or contact customer service. 3. Contact customer service. 4. Contact your gas supplier.
Delayed ignition of burner(s).	1. Manifold pressure is too low. 2. Burner orifice is clogged.	1. Contact your gas supplier. 2. Clean burner (see Care and Maintenance, page 21) or contact customer service.
Burner backfiring during combustion.	1. Burner orifice is clogged or damaged. 2. Burner is damaged. 3. Gas regulator is damaged.	1. Clean burner orifice (see Care and Maintenance, page 21 or contact customer service. 2. Contact dealer or customer service. 3. Replace gas regulator.
High yellow flame during burner combustion	1. Not enough air. 2. Gas regulator is defective.	1. Check burner for dirt and debris. If found, clean burner (see Care and Maintenance, page 21). 2. Replace gas regulator.
Gas odor during combustion.	1. Foreign matter between control valve and burner. 2. Gas leak. (See Warning Statement at top of page 23).	1. Take apart gas tubing and remove foreign matter. 2. Locate and correct all leaks (see “Checking Gas Connections,” page 17).
Heater produces a clicking/ticking noise just after burner is lit or shut off.	1. Metal is expanding while heating or contracting while cooling.	1. This is common with most heaters. If noise is excessive, contact qualified service technician.

PROBLEM	POSSIBLE CAUSE	CORRECTIVE ACTION
White powder residue forming within burner box or on adjacent walls or furniture.	1. When heated, the vapors from furniture polish, wax, carpet cleaners, etc., turn into white powder residue.	1. Turn heater off when using furniture polish, wax, carpet cleaner or similar products.
Heater produces unwanted odors.	1. Heater is burning vapors from paint, hair spray, glues, etc. See IMPORTANT statement, page 22. 2. Gas leak. See Warning Statement, page 23. 3. Low fuel supply.	1. Ventilate room. Stop using odor causing products while heater is running. 2. Locate and correct all leaks (see "Checking Gas Connections," page 17). 3. Refill supply tank (Propane /LP models).
Heater shuts off in use (ODS operates).	1. Not enough fresh air is available. 2. Low line pressure. 3. ODS/pilot is partially clogged.	1. Open window and/or door for ventilation. 2. Contact local gas supplier. 3. Clean ODS/pilot (see Care and Maintenance, page 22).
Gas odor exists even when control knob is in OFF position.	1. Gas leak. See Warning Statement at top of page 22. 2. Control valve is defective.	1. Locate and correct all leaks (see "Checking Gas Connections", page 17). 2. Contact customer service.
Moisture/condensation noticed on windows.	1. Not enough combustion/ventilation air.	1. Refer to "Air for Combustion and Ventilation" requirements, page 8.
Slight smoke or odor during initial operation	1. Residues from manufacturing process.	1. Problem will stop after a few hours of operation.
Heater produces a whistling noise when burner is lit.	1. Turning control knob to high (5) position when burner is cold. 2. Air in gas line. 3. Air passageways on heater are blocked. 4. Dirty or partially clogged burner orifice.	1. Turn control knob to low (1) position and let warm up for a minute. 2. Operate burner until air is removed from line. Have gas line checked by local propane/LP gas company. 3. Observe minimum installation clearances (Fig. 3, page 11) 4. Clean burner (see Care and Maintenance, page 22) or contact customer service.

PROBLEM	POSSIBLE CAUSE	CORRECTIVE ACTION
Fan is not spinning. (Select models)	1. There is no power to the fan. 2. Fan is set to "AUTO". 3. Fan motor is bad.	1. Verify fan is plugged in and set to "MAN" or "AUTO". 2. Allow 5-10 minutes for fan to engage. 3. Replace fan.
Fan is making a loud noise. (Select models)	1. Fan housing or blades are dirty. 2. Fan rotation is blocked. 3. Defective fan.	1. See "Cleaning Fan", page 22. 2. Verify wiring is not in fan path. 3. Replace fan.

REPLACEMENT PARTS LIST

For replacement parts, call our customer service department at 1-877-447-4768, 8:30 a.m. – 4:30 p.m., CST, Monday – Friday.

⚠ **WARNING**: Only use genuine replacement parts from the GHP Group, Inc. Using any parts other than the original replacement parts may result in property damage, personal injury or even death.

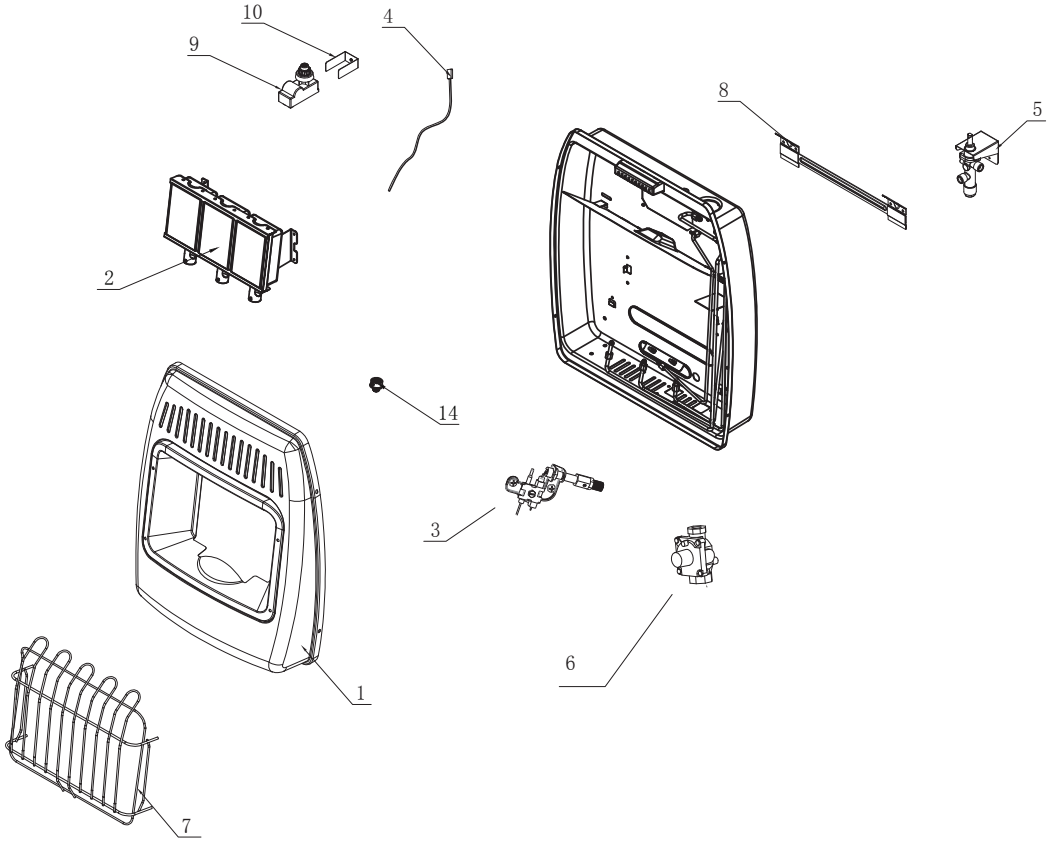

ITEM No.	DESCRIPTION	QTY	PART NO. IR6P/6N Series	IR12P/12N Series	IR18P/18N Series	IR30P/30N Series
1	Front Panel Assembly	1	AQ000090B	AQ000090	AQ000060	AQ000001
2	Burner Assembly	1	AQ000098	AQ000368 LP AQ000380 NG	AQ000370 LP AQ000381 NG	AQ000371 LP AQ000382 NG
3	ODS Assembly (Complete)					
3-1	ODS - (LP) Propane Pilot	1	AQ000121	AQ000121-1	AQ000121-2	AQ000121-2
3-2	ODS - (NG) Natural Gas Pilot	1	AQ000120	AQ000120-1	AQ000120-2	AQ000120-2
4	ODS Connector Wire	1	AQ000110	AQ000110	AQ000052	AQ000052
5	Manual Gas Valve	1	AQ000112	AQ000327	AQ000363	AQ000363 - LP AQ000369 - NG
6-1	NG Regulator Assembly	1	AQ000073F	AQ000073H	AQ000073I	AQ000073J
6-2	LP Regulator Assembly	1	AQ000073G	AQ000073E	AQ00O0073C	AQ000073A
7	Front Grille	1	AQ000099	AQ000099	AQ000063	AQ000023
8	Wall Mounting Bracket	1	AQ000108	AQ000108	AQ000006	AQ000006
9	Ignitor Module	1	AQ000221	AQ000221	AQ000221	AQ000221
10	Ignitor Bracket	1	AQ000019	AQ000019	AQ000019	AQ000019
11	Support Leg (Select Models)	2	AQ000038*	AQ000038*	AQ000038*	AQ000038*
12	Fan Assembly (Select Models)	1	N/A	AQ000232*	AQ000232*	AQ000232*
13	Hardware Pack	1	AQ000233*	AQ000233*	AQ000233*	AQ000233*
14-1	Replacement Orifice (LP)	1	AQ000201 (1 per unit)	AQ000326 (2 per unit)	AQ000326 (3 per unit)	AQ000361 (2 per unit) AQ000326 (3 per unit)
14-2	Replacement Orifice (NG)	1	AQ000200 (1 per unit)	AQ000333 (2 per unit)	AQ000333 (3 per unit)	AQ000362 (2 per unit) AQ000333 (3 per unit)

* Item/version not shown in exploded parts diagram

Printed in China

WARRANTY

The manufacturer warrants that your new product is free from manufacturing and material defects for a period of one year from date of purchase, subject to the following conditions and limitations.

1. This product must be installed and operated at all times in accordance with the instructions furnished with the product. Any alteration, willful abuse, accident, or misuse of the product shall nullify this warranty.
2. This warranty is non-transferrable, and is made to the original owner, provided that the purchase was made through an authorized supplier of the manufacturer.
3. This warranty is limited to the repair or replacement of part(s) found to be defective in material or workmanship, provided that such part(s) have been subjected to normal conditions of use and service, after said defect is confirmed by the manufacturer's inspection.
4. The manufacturer may, at its discretion, fully discharge all obligations with respect to this warranty by refunding the wholesale price of the defective part(s).
5. Any installation, labor, construction, transportation, or other related costs/expenses arising from defective part(s), repair, replacement, or otherwise of same, will not be covered by this warranty, nor shall the manufacturer assume responsibility for same. Further, the manufacturer will not be responsible for any incidental, indirect, or consequential damages, except as provided by law.
6. All other warranties - expressed or implied - with respect to the product, its components and accessories, or any obligations/liabilities on the part of the manufacturer are hereby expressly excluded.
7. The manufacturer neither assumes, nor authorizes any third party to assume, on its behalf, any other liabilities with respect to the sale of this product.
8. The warranties as outlined within this document do not apply to non-manufacturer accessories used in conjunction with the installation of this product.

This warranty is void if:

a) The product has been operated in atmospheres contaminated by chlorine, fluorine or other damaging chemicals.

b) The product is subjected to prolonged periods of dampness or condensation.

c) Any alteration, willful abuse, accident, or misuse of the product.

IF WARRANTY SERVICE IS NEEDED . . .

1) Contact customer service at 1-877-447-4768, 8:30 a.m. – 4:30 p.m., CST, Monday – Friday. Make sure you have your warranty, your sales receipt, and the model/serial number of your product.
2) DO NOT ATTEMPT TO DO ANY SERVICE WORK YOURSELF.

TO REGISTER THE WARRANTY ON YOUR HEATER, PLEASE FILL OUT THIS CARD COMPLETELY AND MAIL WITHIN 14 DAYS FROM DATE OF PURCHASE OR REGISTER ON-LINE AT www.ghpgroupinc.com

NAME: _____ PHONE: ( ) _____ EMAIL: _____
ADDRESS: _____ CITY: _____ STATE: _____ ZIP: _____
MODEL: _____ SERIAL #: _____ DATE PURCHASED: _____
DEALER PURCHASED FROM: _____ TYPE OF STORE: _____
CITY & STATE WHERE PURCHASED: _____ PRICE PAID: _____

Please Take a Minute To Give Us Your Answers To The Following Questions.
All Responses Are Used Solely For Market Research And Are Held In Strict Confidence.

Who primarily decided this purchase? ☐ Male ☐ Female ☐ 18-24 ☐ 25-39 ☐ 40-59 ☐ 60 and over
Purpose of Purchase? _____
Do you own any other portable heaters? ☐ Yes ☐ No If yes, type_____brand_____
How do you intend to use your new heater? ☐ Construction Site ☐ Farm ☐ Warehouse/Commercial ☐ Garage/Outbuilding ☐ Other
How did you become aware of this heater? ☐ In-Store Display ☐ Newspaper Ad ☐Magazine Ad ☐ Friend/Relative
☐ TV Commercial ☐ Store Salesperson ☐ Other _____
What made you select this heater? ☐ Style ☐ Size/Portability ☐ Price ☐ Package ☐ Brand ☐ Other _____
Do you: ☐ own ☐ rent Would you recommend this heater to a friend? ☐ Yes ☐ No
Please give us your comments:_____

THANK YOU FOR COMPLETING THIS FORM!
Information will be held confidential.

WARRANTY REGISTRATION

IMPORTANT: We urge you to fill out your warranty registration card within fourteen (14) days of date of purchase. You can also register your warranty on the internet at www.ghpgroupinc.com. Complete the entire serial number. Retain this portion of the card for your records.

GHP Group, Inc.
6440 W Howard St
Niles, IL 60714-3302

Tel: (877) 447-4768
www.ghpgroupinc.com

SAVE THIS CARD!

GHP Group, Inc.
6440 W Howard St
Niles, IL 60714-3302